US 10 Add-a-Lane from CSAH 78 to CSAH 9

Feasibility Report

Report Version 1.0

Anoka County Highway Department

Prepared by:

SRF

SRF No. 12360

September 2019

Table of Contents

Introduction ____ *1*

Existing Conditions ____ *3*

Geometric ____ 3

Traffic ____ 3

Concept Development ____ *7*

Inside Add Lane Alternative ____ 7

Outside Add Lane Alternative ____ 8

Dynamic Shoulder Alternative ____ 9

Traffic Analysis ____ *11*

Year 2040 Traffic Forecasts ____ 11

Noise Analysis ____ *15*

Traffic Noise Modeling ____ 15

Noise Receptors ____ 16

Noise Wall Analysis Results ____ 16

Cost Estimates ____ *17*

Cost Estimate Details ____ 18

Findings ____ *18*

Next Steps ____ *19*

H:\Projects\12000\12360_Correspondence\Memorandums\DRAFT US 10 Summary Document.docx

List of Figures

Figure 1. US 10 Study Area 1

Figure 2. Existing Hours of Congestion 4

Figure 3. Travel Pattern Diversion from US 10 to CSAH 1 (Coon Rapids Boulevard) 5

Figure 4. River Crossing Trips on the TH 610 Bridge 6

Figure 5. US 10 Travel Pattern to Andover via CSAH 78 (Hanson Blvd) and CSAH 9 (Round Lake Blvd) 6

Figure 6. Distribution of Trips Exiting from US 10 to CSAH 78 and CSAH 9 7

Figure 7. Dynamic Shoulder Lane at Entrance Ramp 9

Figure 8. Dynamic Shoulder Lane at Exit Ramp 10

Figure 9. Traffic Volume Changes from Existing Conditions to 2040 No Build Conditions 12

Figure 10. Year 2040 Build Forecast Changes from Year 2040 No Build Forecasts 13

Figure 11. Volume-to-Capacity Comparison for Westbound US 10 14

Figure 12. Typical MnDOT Design for 20-Foot Concrete Noise Walls 16

Figure 13. Illustrative Schedule for Accelerated Implementation 19

List of Tables

Table 1. Forecast Scenario Assumptions 11

Table 2. US 10 Concept Alternative Cost Estimates 17

List of Attachments

Attachment A

Existing Roadway and Bridge Typical Sections

Attachment B

Traffic Analysis Technical Memorandum

Attachment C

Concept Cost Estimates

Attachment D

Traffic Noise Tables

Introduction

A feasibility study was undertaken to investigate traffic conditions and improvement concepts along US 10 in Coon Rapids, Minnesota. The area of potential improvements is located on US 10 between County State Aid Highway (CSAH) 78 (Hanson Boulevard) and CSAH 9 (Round Lake Boulevard). The study area encompasses a number of parallel and intersecting roadways including CSAH 1 (Coon Rapids Boulevard) and CSAH 14 (Main Street). This technical report documents the evaluation process and findings of the feasibility study.

Figure 1. US 10 Study Area

The traffic analysis portion of the feasibility study included several elements. First, existing travel patterns were evaluated using data from the StreetLight Insights platform. Next, future traffic demand through the corridor was forecast using Anoka County's version of the Metropolitan Council's activity-based travel demand model. Finally, additional travel demand modeling was conducted to consider impacts of numerous upcoming construction project and impacts they may have on the US 10 study area.

The concept design activities completed as part of the study featured development of several concepts to provide additional capacity along US 10 between CSAH 78 and CSAH 9. These include options that provide the extension of existing mainline lanes, along with more modest designs that introduce auxiliary lanes between through one or both of the study segments. In addition, an innovative concept for a dynamic shoulder lane was explored as a lower-cost option to add capacity with lower impacts.

Potential noise impacts and mitigation measures were also evaluated to establish an understanding on a future project. This evaluation utilized current MnDOT noise policy standards in considering noise impacts, potential noise wall locations, and cost effectiveness.

Finally, capital cost estimates for the improvement concepts were developed. These were prepared using known quantities and accepted mobilization factors in a modified LWD approach. Construction costs for roadway elements as well as noise walls were included for each concept.

The overall feasibility evaluation finds that there is a demonstrated need for additional capacity along US 10 in the study area. Existing travel patterns show diversion off of the facility onto local roadways during congested periods, and future traffic volumes are expected to grow through year 2040. The design evaluation indicates that additional lanes can be added to US 10 in a variety of configurations without significant modifications to existing mainline lanes or bridges.

The conclusion of this effort suggests that further highway design and traffic analysis is warranted to continue to advance a potential project. This report outlines several next steps that can be undertaken to develop more detailed highway design plans, analyze traffic, and obtain necessary approvals for the improvements.

Existing Conditions

Existing conditions were reviewed to establish a baseline for the geometric configuration of US 10 and traffic patterns, volumes, and congestion in the study area.

Geometric

The existing US 10 roadway between CSAH 78 and CSAH 9 consists of a divided 4-lane rural freeway section with a depressed inside median and 64' centerline spacing between EB and WB US 10. The current roadway design meets trunk highway standards for a 70 mile per hour (mph) design speed with 12' lanes, 10' outside shoulders and 4' inside shoulders.

East of CSAH 78, US 10 has a six-lane cross section. The outside lanes on eastbound and westbound US 10 begin and end with the eastbound entrance and westbound exit at CSAH 78, respectively. To the west of these ramps US 10 has a four-lane cross section through the west side of the study area, including the CSAH 14 and CSAH 9 interchanges.

There are three existing bridges along the section of roadway where an additional lane is being analyzed at Northdale Boulevard (Br. No. 02570), Main Street / CSAH 14 (Br. No. 02559) and Hanson Boulevard / CSAH 78 (Br. No. 02567). In review of the record bridge plans, the existing bridges would have sufficient horizonal and lateral clearance available for a lane addition on US 10. (See Attachment A for figures of existing roadway and bridge typical sections.)

Traffic

Existing traffic conditions on US 10 were evaluated with respect to current traffic volumes, congestion levels, and travel patterns. Current annual average daily traffic (AADT) volumes range from 68,000 to 69,000 vehicles per day (vpd) on US 10 between CSAH 78 and CSAH 9. Other current AADT volumes on study area roadways are shown in Appendix A, Figure A-1 of the *Traffic Analysis Technical Memorandum* in Attachment B.

The *2018 Congestion Report* prepared by Minnesota Department of Transportation (MnDOT) was referenced for current congestion conditions along US 10. AM and PM hours of congestion are shown in Figure 1, where yellow segments are up to one hour of congestion per peak and orange segments are one to two hours of congestion. MnDOT defines congestion as the amount of time freeway speeds fall below 45 mph.

During the morning peak, eastbound US 10 is observed to experience one to two hours congestion. The affected area extends from CSAH 14 to approximately 1.5 miles upstream. During the afternoon peak, westbound US 10 also experiences one to two hours of congestion. This extends upstream from Hanson Boulevard approximately 3.25 miles, nearly to the US 10/TH 610 split.

Figure 2. Existing Hours of Congestion

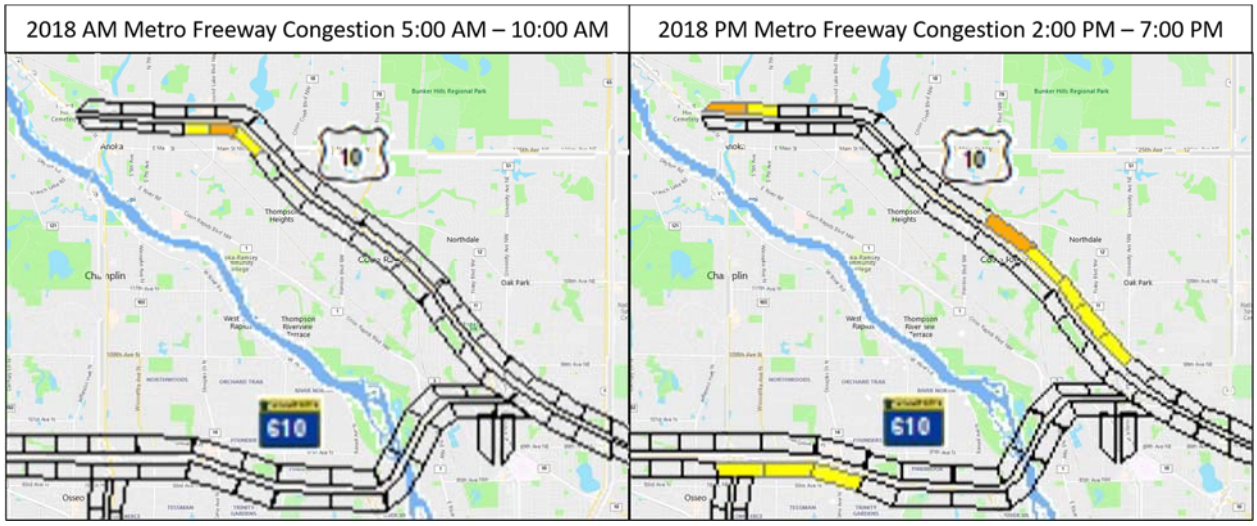

Source: Minnesota Department of Transportation *2018 Congestion Report*

Travel Pattern Evaluation

Existing travel patterns were evaluated using data obtained through the StreetLight Insights platform. This web-based application summarizes vehicle movement data collected from GPS and mobile devices. The platform allows users to specify traffic analysis zones (TAZ) and pass-through filters on roadways to capture origin-destination patterns of travelers in a study area. Additional technical details of this platform are provided in the *Traffic Analysis Technical Memorandum* in Attachment B.

A number of characteristics of travel patterns in the study area were explored to understand the utilization of US 10 and impacts from traffic congestion. This section highlights the major questions and findings from the travel pattern evaluation. Additional technical details and maps from the analyses are provided in Attachment B.

What are the typical length of trips on US 10?

This analysis explored trips that have regional patterns – greater than 10 miles – versus local travel patterns of travelers accessing nearby land uses. The StreetLight analysis was set up to capture trips on either end of the corridor, near US 10 and TH 47 on the west and Cities of Anoka and Ramsey border, and near the I-35W/I-694 system interchange on the east.

Outcomes from this evaluation reveals that almost half of the trips starting from these locations pass through and travel outside the study area. Comparatively, just under 40 percent of trips end in adjacent zones or neighboring city limits. These results strongly suggest that the majority of trips on US 10 in the study area have longer trip lengths and are regional, as opposed to local, in nature.

What are typical destinations for travelers using US 10?

To address this question, similar data extraction parameters were used, with a pass-through zone to the east of the study area near I-35W and I-694. However, in this evaluation the focus was on where

trips were destined and where they accessed US 10. The trip data showed that a many of these trips are destined for the communities of Coon Rapids, Anoka, and Ramsey. Nonetheless, almost one third of trips travel along US 10 beyond this area to destinations west of Ramsey, or on north-south roadways to locations north of Coon Rapids. All of these destinations constitute relatively long trip lengths of more than 10 miles.

Is there diversion off of US 10 during congested conditions?

Two diversion patterns off of US 10 were evaluated using data obtained through StreetLight. The first was diversion onto CSAH 1, a minor arterial parallel to US 10. The other was for trips to Andover, north of US 10, and whether trips were exiting US 10 prior to their intended destination.

For diversion to CSAH 1, middle filters were placed on US 10 and CSAH 1 near CSAH 9. The origin area includes trips originating from the Cities of Anoka and Ramsey or further west on US 10. As might be expected, a large portion of traffic on CSAH 1 are destined for areas including the southern part of the Coon Rapids and Cities of Blaine, Mounds View, Fridley and Spring Lake Park. However, the data also shows that about 30 percent of trips on CSAH 1 are using the TH 610 bridge to cross the Mississippi River.

Figure 3. Travel Pattern Diversion from US 10 to CSAH 1 (Coon Rapids Boulevard)

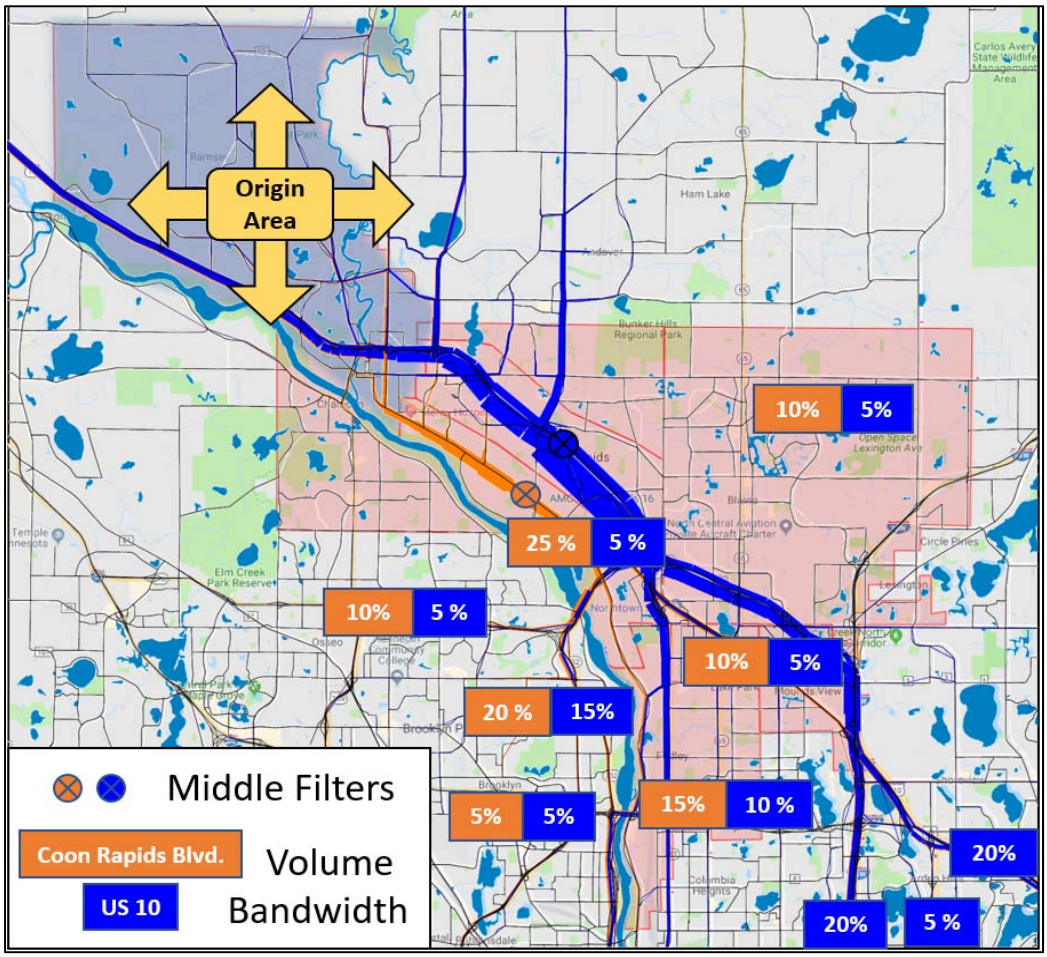

Data reveals fewer trips from US 10 use the TH 610 bridge to cross the bridge and travel south as compared to the CSAH 1 (Coon Rapids Boulevard). Indeed, as these movements are further broken down by time of day, it is observed that diversion to CSAH 1 among TH 610 river crossing trips surges in peak periods when US 10 experiences congestion.

Figure 4. River Crossing Trips on the TH 610 Bridge

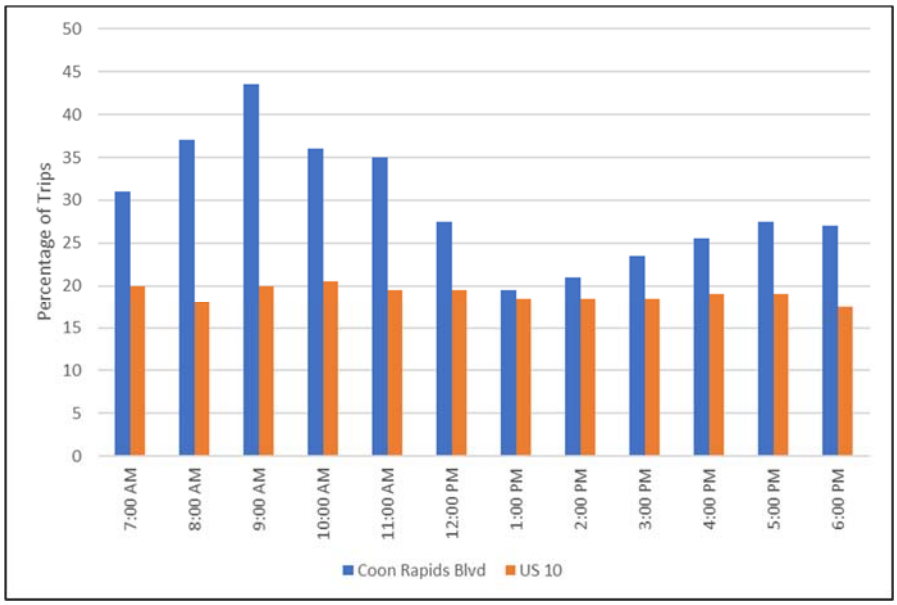

The second diversion analysis considered whether trips exit US 10 earlier than intended during congested conditions. The locations affected by this include the westbound exits from US 10 to CSAH 78 and CSAH 9. Traffic on westbound US 10 exiting at these locations were compared by time of day. Figure 3 shows that prior to the afternoon peak period there is a similar proportion of trips using each of these exits. As the afternoon peak occurs, however, an increasing proportion of trips exit at CSAH 78 (Hanson Boulevard).

Figure 5. US 10 Travel Pattern to Andover via CSAH 78 and CSAH 9

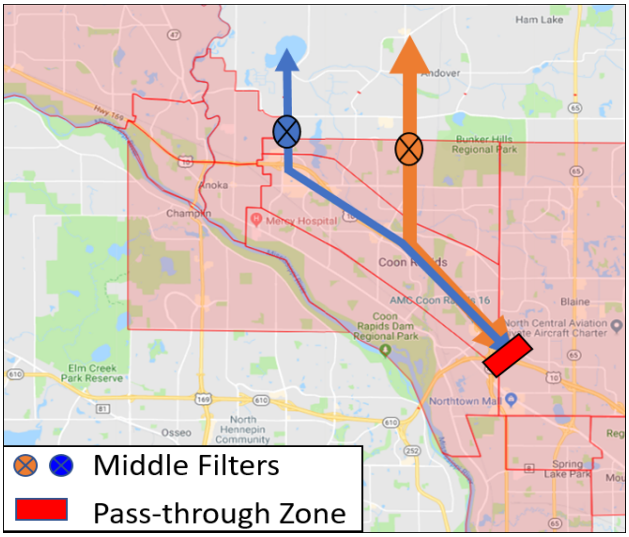

Figure 6. Distribution of Trips Exiting from US 10 to CSAH 78 and CSAH 9

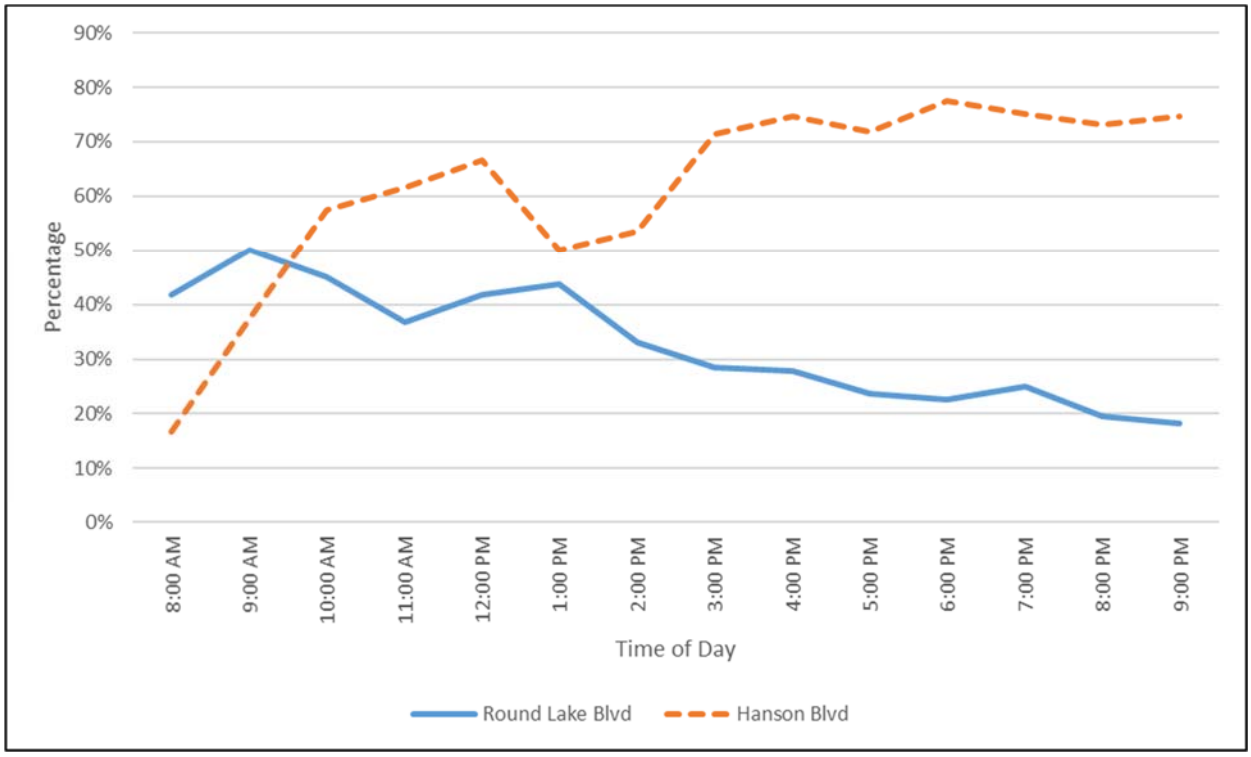

It is expected that this occurs as congestion builds on this area of US 10, and drivers exit in advance of their intended destination along CSAH 9 north of US 10 in Andover. These diverted trips place additional strain on the local network as they use lower functional class roadways to reach their destinations.

Concept Development

The highway design phase of the feasibility study explored a series of improvement concepts to add lanes along US 10 between CSAH 78 and CSAH 9. These concepts include the addition of lanes to extend the six-lane cross section west of CSAH 78 to CSAH 9. These were evaluated as inside lane additions or outside lane additions. A dynamic shoulder lane concept was also explored, both in terms of cross section and potential operating considerations.

Inside Add Lane Option

The inside add lane option would utilize the available center median area and construct an additional 12' lane in each direction on US 10. Due to the limited amount of existing median width, the resulting inside shoulders width would be 6.9' and include a center median barrier. The 6.9' inside shoulders do not meet standards (10' shoulder width standard for a 3-lane section) and a design exception would be required. In this alternative, all of the reconstruction would occur in the middle of US 10 and the existing entrance and exit ramps would remain "as-is". The reconstruction of the WB US 10 curve near Northdale Boulevard and EB and WB curves south of Hanson Boulevard would be proposed to maintain through lane continuity on US 10.

Design Features and Considerations

- Noisewalls may be necessary for improvements
- Minimal wetland impacts for inside median construction
- Urban drainage system required for inside shoulder with median barrier
- Ponding / BMP's will be required for additional impervious area
- Right of way impacts may be required for construction of ponding / BMP's
- Reconstruction of curves at Round Lake Boulevard and Hanson Boulevard required on US 10 to maintain through lane continuity
- Existing bridges can accommodate inside add lane improvements
- Design exception for proposed inside shoulder width

(See Attachment A for figures of proposed inside add lane typical sections and plan view graphics)

Outside Add Lane Option

The outside add lane option would widen to the outside of US 10 by constructing a proposed 12' lane and 10' outside shoulder. The rural drainage system would be maintained by reestablishing the outside ditch system and lengthening existing cross culverts. Entrance and exit ramps would need to be reconstructed to accommodate the lane addition to the outside. A design exception may be required to allow for the existing 4' inside shoulder to remain in-place as the standard inside shoulder width is 10' for a 3-lane section.

Design Features and Considerations

- Noisewalls may be necessary for improvements
- Wetland impacts will need to be mitigated for due to outside widening (credit purchase or on-site mitigation)
- Rural drainage system to be utilized
- Ponding / BMP's will be required for additional impervious area
- Right of way impacts may be required for construction of ponding / BMP's
- Reconstruction of entrance and exit ramps
- Existing bridges can accommodate outside add lane improvements
- Design exception for existing inside shoulder width

(See Attachment A for figures of proposed inside add lane typical sections and plan view graphics)

Additional Outside Add Lane Options

The design work performed for the outside add lane option also provides the basis for a number of sub-options considered in this study. These would similarly provide additional lanes on the outside of US 10, but would be constructed for shorter segments or a single direction. Sub-options included **auxiliary lanes**, in which a lane is added on the outside of US 10 starting at an interchange on ramp and ending at the next interchange off ramp. Another sub-option was **directional add lane**, with only the westbound lane added from Hanson Boulevard to Coon Rapids Boulevard.

Dynamic Shoulder Alternative

The 12' dynamic shoulder lane alternative would be implemented on the outside of US 10 between the Round Lake Boulevard and Hanson Boulevard interchanges. The shoulder lane would operate as a general-purpose lane during peak periods and would be controlled by using dynamic message signs.

Signage

The dynamic shoulder lane would be controlled (opened/closed) by dynamic message signs located at the beginning of the lane and at freeway entrance/exit ramps. These dynamic message signs would be full color and full matrix, capable of displaying any message or graphic posted by the MnDOT RTMC. However, they would primarily be used to indicate the status of the dynamic shoulder lane (open or closed) using text or simple graphics such as green arrows or red X's. The dynamic message signs could also display chevrons during the period of time when the lane is changing from open to closed.

Static signs would also be installed along the corridor to reinforce the status of the dynamic shoulder. These static signs would provide information such as "SHOULDER USE PERMITTED ON GREEN ARROW". Static signs would also be present in advance of the beginning of the dynamic shoulder lane to remind motorists of its presence and appropriate use.

Exit / Entrance Ramps

Careful consideration should be used during the design of the dynamic shoulder lane, particularly in the vicinity of entrance and exit ramps. This includes pavement markings, dynamic message signs, and static signing. The following figures depict a high-level layout at entrance and exit ramps.

Figure 7. Dynamic Shoulder Lane at Entrance Ramp

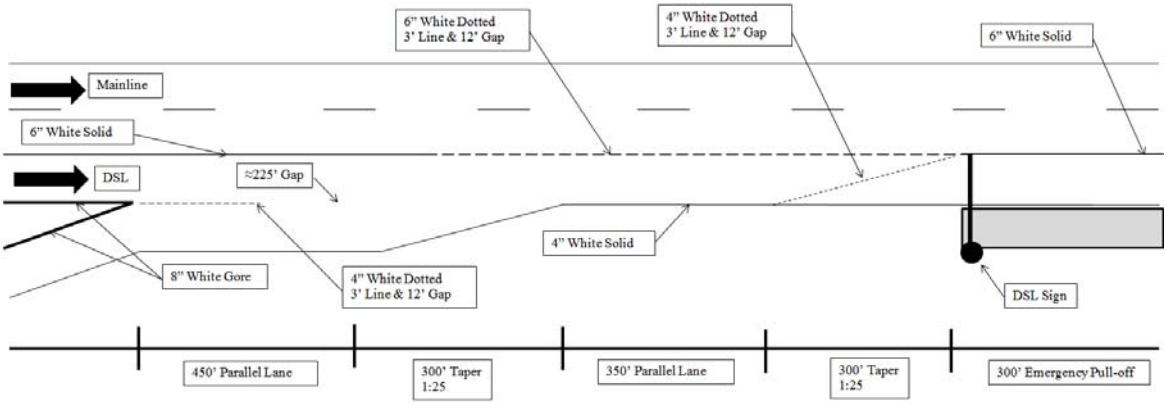

Figure 8. Dynamic Shoulder Lane at Exit Ramp

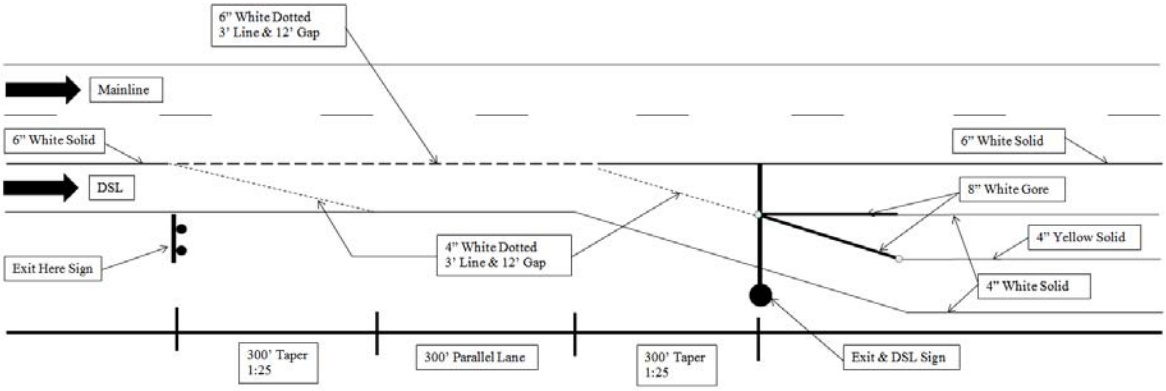

Design Features and Considerations

- Noisewalls may be necessary for improvements
- Reconstruction of existing outside shoulders to 12' width
- Minimal addition of impervious area
- Operations of dynamic shoulder through entrance and exit ramps to be investigated
- Existing bridges can accommodate outside add lane improvements

(See Attachment A for figures of proposed dynamic shoulder typical sections and plan view graphics)

Traffic Analysis

Improvement concepts developed for US 10 were evaluated through the development of traffic forecasts. Future traffic volumes were prepared for year 2040 conditions using Anoka County's version of the Metropolitan Council's activity-based travel demand model. This model was recently updated with land use information adopted in city comprehensive plans and to provide additional roadway network detail. Additional methods and assumptions for travel demand modeling are presented in the *Traffic Analysis Technical Memorandum* in Attachment B.

Impacts to US 10 from a number of current and upcoming major construction projects were also evaluated. Traffic volume changes were similarly developed using Anoka County's version of the model, but using existing demand conditions to reflect minimal background traffic growth by the time those projects are constructed.

Year 2040 Traffic Forecasts

Future year traffic forecasts were prepared for no build as well as a series of build options. The "full build" option reflects the addition of one general purpose lane in each direction on US 10 between CSAH 78 and CSAH 9. This would result in extending the six-lane cross section from its current end point at CSAH 78 further west to CSAH 9. Forecasts were also developed for other build options with lower levels of capacity added, and are summarized in Table 1. For the purposes of traffic forecasts, the addition of lanes on the inside or outside of existing US 10 lanes does not influence results.

Table 1. Forecast Scenario Assumptions

Year 2040 Scenario	Geometric Assumptions
Full Build	Additional travel lane in each direction between Hanson Boulevard and Round Lake Boulevard.
Partial Build	Additional travel lane in each direction between Hanson Boulevard and Main Street
Full Auxiliary	Auxiliary lane in each direction between Hanson Boulevard and Main Street, and between Main Street and Round Lake Boulevard
Partial Auxiliary	Auxiliary lane in each direction between Hanson Boulevard and Main Street
Dynamic Shoulder	Improved shoulders that can be used as a third travel lane in the peak direction of travel (AM eastbound, PM westbound) between Hanson Boulevard and Round Lake Boulevard

No Build Forecasts

Year 2040 forecasts for No Build conditions show continued traffic growth in the US 10 corridor. Increases in ADT of 10,000 to 11,000 vpd are expected in the project location. The width of the green lines in Figure 5 show the magnitude of traffic increases expected. In addition to the growth on US 10, these shows that significant traffic increases are also expected on many parallel and intersecting roadways in the study area.

Figure 9. Traffic Volume Changes from Existing Conditions to 2040 No Build Conditions

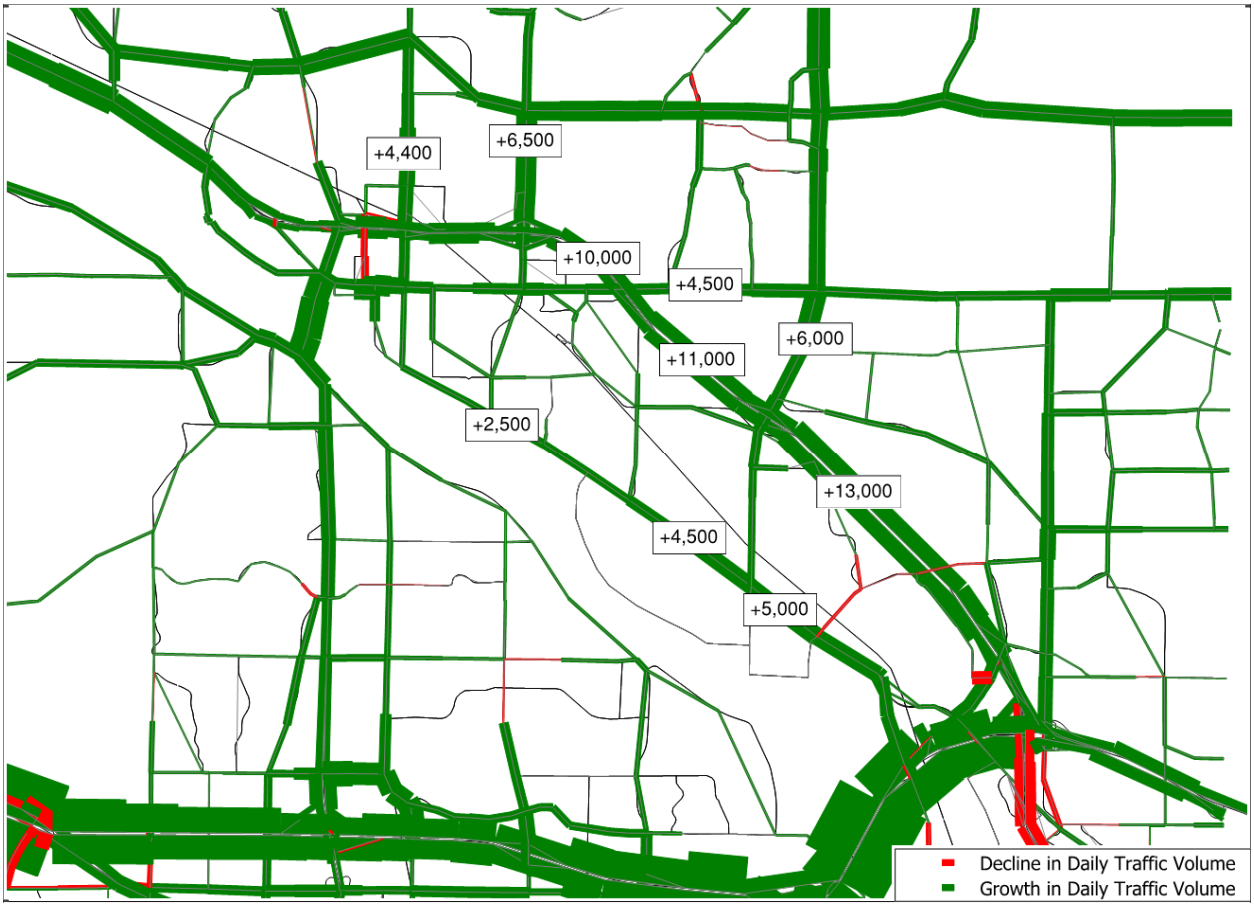

Build Forecasts

Year 2040 forecasts were also prepared for the build options under consideration. For the full build option, year 2040 ADT on US 10 would be expected to increase an additional 6,000 to 8,000 vpd beyond the no build forecasts. This increase reflects travel pattern shifts off of other study area roadways as traffic uses US 10. In particular, CSAH 1 and CSAH 78 (north of US 10) show decreased traffic compared to no build conditions. This is an important finding since these roadways were observed to carry traffic diverted off of US 10 in the existing conditions travel pattern evaluation.

Figure 10.Year 2040 Build Forecast Changes from Year 2040 No Build Forecasts

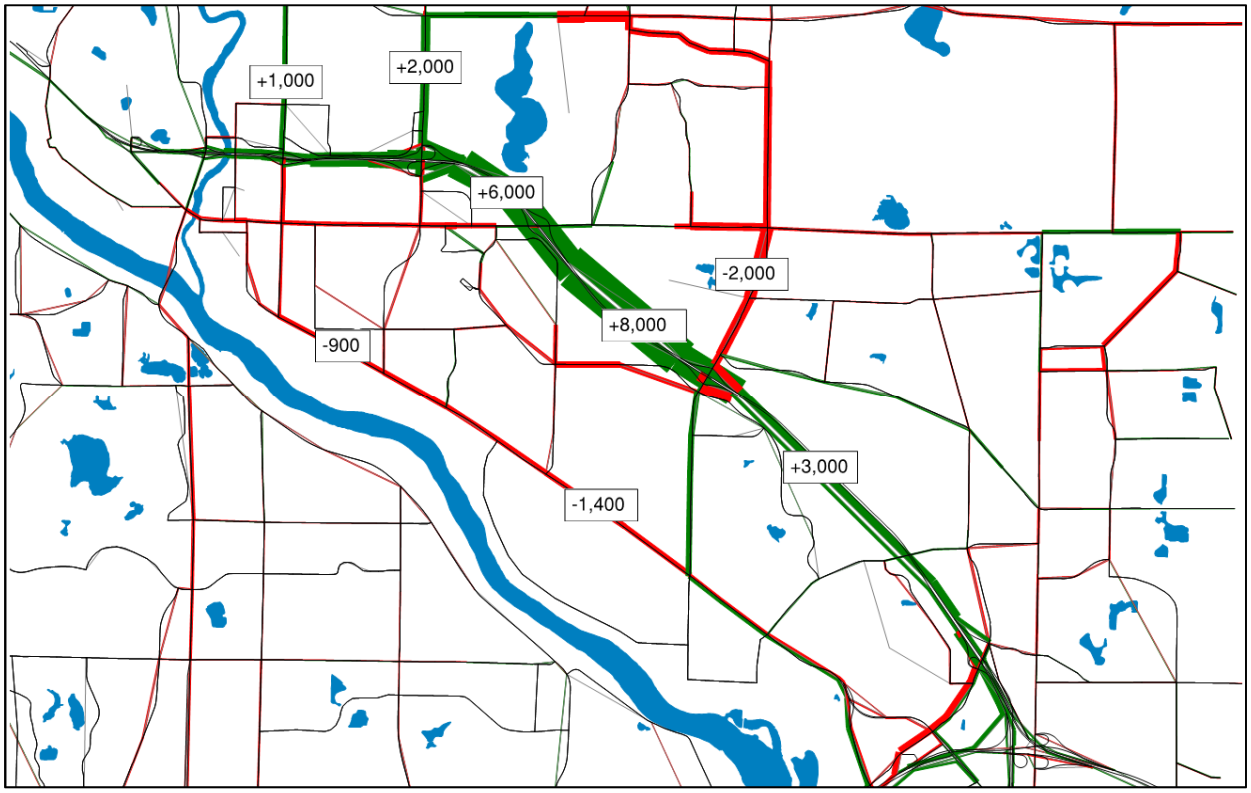

Traffic forecasts for other build options show similar traffic patterns, but less dramatic changes in daily volumes compared to the full build option. This is an intuitive outcome as these other options less overall capacity added to US 10. Daily traffic forecasts for all options are provided in Appendix A of the *Traffic Analysis Technical Memorandum*.

Peak Hour Traffic Forecasts

The daily traffic forecasts prepared using the travel demand model for year 2040 were further used to develop peak hour traffic forecasts for the no build and build options. These forecasts reflect growth of existing peak hour demand volumes, and have been balanced at entrance and exit ramps through eastbound and westbound US 10 through the study area. The resulting volumes were subjected to MnDOT guidance for traffic forecast reasonableness checks, to confirm reasonable growth assumptions. Detailed peak hour traffic forecasts for existing and year 2040 options are provided in Appendices B and C of the *Traffic Analysis Technical Memorandum*.

To understand impacts to congestion, a planning level volume-to-capacity (V/C) comparison was completed for segments of westbound US 10. This compared the results shown in the forecast reasonableness tables for existing, no build, and full build options. Figure 6 shows that existing peak hour demand at CSAH 78 (Hanson Boulevard) has a V/C ratio 1.00, resulting in a bottleneck that causes the congestion observed in the *2018 Congestion Report* extending upstream of this location. Under 2040 no build, the V/C ratio increases to 1.08, which would be expected to worsen the level of congestion.

For 2040 full build, capacity is added between CSAH 78 and CSAH 9 (Round Lake Boulevard) resulting in the segments between the interchanges to have demand under capacity. Importantly, the segment downstream of CSAH 9 would remain in the "approaching capacity" classification, indicating that a new bottleneck would not be created as a result of the added capacity.

Figure 11. Volume-to-Capacity Comparison for Westbound US 10

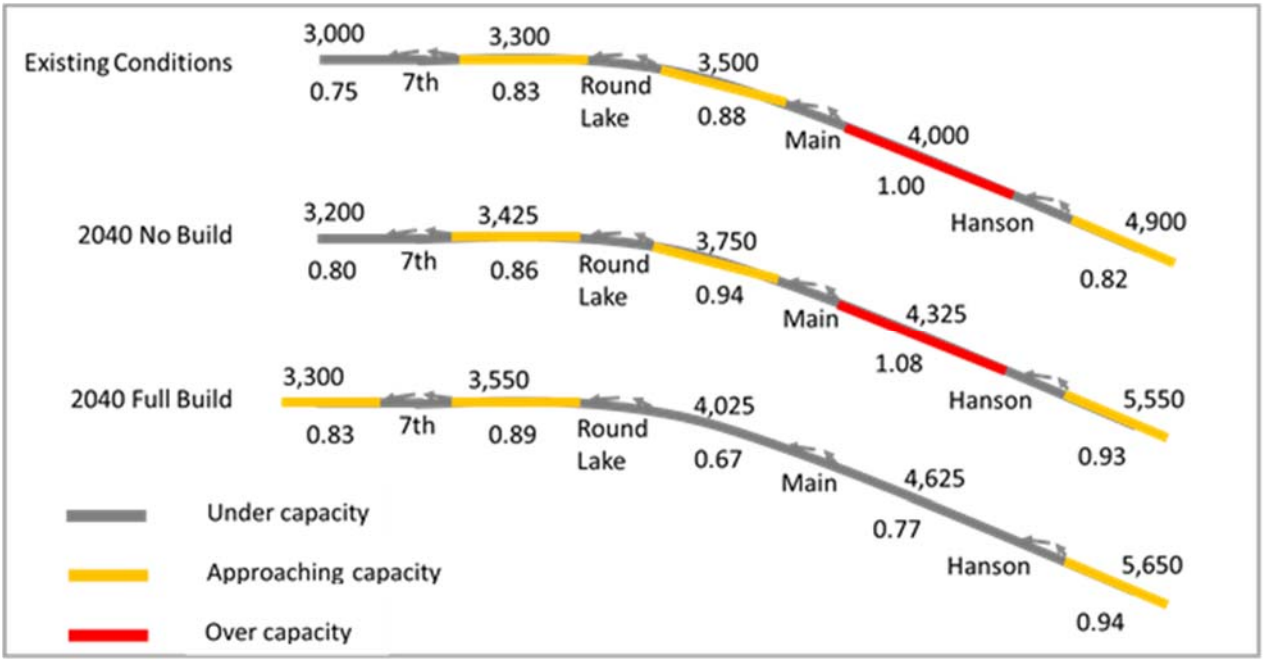

Construction Traffic Impacts

Traffic forecast modeling was conducted to identify impacts to US 10 in the study area resulting from several significant highway construction projects in the region. This exercise utilized the existing conditions version of the travel demand model. Major projects considered include the TH 252 Freeway Conversion, TH 169 Freeway Conversion in Elk River, I-94 in northwest Hennepin County, I-35W MnPASS, and TH 10 in Anoka. These evaluations showed that significant increases in traffic on US 10 in the study area are not expected to result from the projects. The scenario with the largest increase is the combination of the I-94 and I-35W projects, which show an increase of approximately 3,000 vpd on US 10. Additional details of these evaluations are presented in the *Traffic Analysis Technical Memorandum*.

Noise Analysis

A planning-level traffic noise analysis was completed for TH 10 segment between Main Street and Hanson Boulevard. The purpose of this analysis was to determine if noise walls along the south side of TH 10 adjacent to residences and parklands would meet the noise wall reasonableness thresholds identified in the 2017 MnDOT noise requirements (2017 MnDOT Noise Requirements for Type I Federal-aid Projects as per 23 CFR 772, effective July 10, 2017).[1] Results of the traffic noise analysis are summarized below.

Traffic Noise Modeling

Noise modeling was done using the FHWA's noise prediction program Traffic Noise Model (TNM), version 2.5. This model uses traffic volumes, speed, class of vehicle (cars, medium trucks, heavy trucks, buses, and motorcycles), and the typical characteristics of the roadway being analyzed (e.g., roadway width, horizontal alignment, vertical profile, etc.) to predict traffic noise levels.

Eastbound and westbound TH 10 were digitized using existing elevations and entered into TNM as a single roadway. The roadway width for eastbound and westbound TH 10, including inside and outside shoulders, was 56 feet. The third lane on eastbound and westbound TH 10 was assumed to be added to the outside of the existing travel lanes.

Traffic data for the noise model input file included future (year 2040) forecast traffic volumes for TH 10. The p.m. peak hour was assumed to be the worst noise hour. The assumed vehicle mix was 95 percent cars, 1 percent medium trucks, and 4 percent heavy trucks. Table 1 tabulates the traffic volume input for eastbound and westbound TH 10. The modeled speed for TH 10 was 65 mph because this is the existing posted speed.

TH 10 Add-Lane Noise Model Input (2040 PM Peak Hour Volumes)

Vehicle Type	EB TH 10 (vehicles/hour)	WB TH 10 (vehicles/hour)
Cars	3,515	4,655
Medium Trucks	37	49
Heavy Trucks	148	196
Buses	0	0
Motorcycles	0	0

[1] The 2017 MnDOT noise requirements document is available online on the MnDOT Office of Environmental Stewardship webpage at http://www.dot.state.mn.us/environment/noise/pdf/2017-noise-requirements.pdf.

Noise Receptors

Traffic noise levels were modeled at 104 receptor locations on the south side of TH 10 (within 500 feet of the roadway) representing residences, parks/school athletic fields, business offices, and a church. Modeled receptor locations for Thorpe Park and Coon Rapids High School athletic fields were identified as described in the 2017 MnDOT Noise Requirements (i.e., one representative receptor location for each 100 feet of frontage which includes an improved area of frequent human use that would benefit from a reduced noise level within 500 feet from eastbound TH 10).[2]

Noise Wall Analysis Results

Two noise walls were evaluated along the south side of TH 10 between Main Street and Hanson Boulevard. The analysis included a gap between the two noise walls at the Coon Creek tributary crossing under TH 10. Modeled walls were 20 feet tall and did not include tapers at the wall ends. Model input with receptor locations and modeled noise walls is available from Anoka County. Figure 1 in Attachment D illustrates the location of the two modeled noise walls. Table 1 and Table 2 found in Attachment D tabulate noise wall cost-effectiveness results.

Figure 12.Typical MnDOT Design for 20-Foot Concrete Noise Walls

Source: Minnesota Department of Transportation

Noise Wall 1 (South Side of TH 10, Main Street to Coon Creek Tributary)

Receptors NA1 through NA24 and NB1 through NB30 represent residences on the south side of TH 10 between Main Street and Thorpe Park. Receptors PARKA1 through PARKA9 represent Thorpe Park. Modeled noise levels at residential receptors are projected to exceed the Federal noise abatement criterion for Activity Category B. Modeled noise levels at receptors representing Thorpe Park are projected to exceed the Federal noise abatement criterion for Activity Category C.

[2] Minnesota Department of Transportation. July 10, 2017. *Noise Requirements for MnDOT and Other Type I Federal-aid Projects*. Appendix A, Guidance on Selection and Use of Noise Analysis Locations, Assigning Noise Receptors for Activity Category C.

An approximately 4,181-foot long, 20-foot high noise wall was modeled along the south side of TH 10 in trunk highway right of way between Main Street and the Coon Creek tributary. The 20-foot high noise wall provides a reduction that varies from 2.3 dBA to 14.6 dBA. The cost-effectiveness of the 20-foot high noise wall is $52,813 per benefited receptor (see Table 2). The approximately 4,181-foot long, 20-foot high noise wall meets MnDOT's noise reduction design goal (minimum 7 dBA reduction for at least one benefited receptor) and is below MnDOT's cost effectiveness criterion of $78,500 per benefited receptor.

Noise Wall 2 (South Side of TH 10, Coon Creek Tributary to Hanson Boulevard)

Receptors NC1 through NC15 represent residences on the south side of TH 10 adjacent to the Coon Rapids High School athletic fields. Receptors PARKB1 through PARKB6 and PARKC1 through PARKC15 represent Coon Rapids High School athletic fields. Receptors ND1 through ND5 represent business offices and a church along the south side of TH 10 east of the athletic fields. Modeled noise levels at residential receptors are projected to exceed the Federal noise abatement criterion for Activity Category B. Modeled noise levels at receptors representing Coon Rapids High School athletic fields and the church east of the athletic fields are projected to exceed the Federal noise abatement criterion for Activity Category C. The modeled noise level at one receptor location representing the business offices is projected to exceed the Federal noise abatement criterion for Activity Category E (Receptor ND1).

An approximately 3,301-foot long, 20-foot high noise wall was modeled along the south side of TH 10 in trunk highway right of way between the Coon Creek tributary and Hanson Boulevard. The 20-foot high noise wall provides a reduction that varies from 3.7 dBA to 13.9 dBA. The cost-effectiveness of the 20-foot high noise wall is $66,020 per benefited receptor (see Table 3). The approximately 3,301-foot long, 20-foot high noise wall meets MnDOT's noise reduction design goal (minimum 7 dBA reduction for at least one benefited receptor) and is below MnDOT's cost effectiveness criterion of $78,500 per benefited receptor.

Cost Estimates

Cost estimates for the inside add lane, outside add lane and dynamic shoulder alternatives were developed using a modified LWD cost estimating method. Quantities for pavement, earthwork, curb & gutter, median barrier, noise walls and pavement removals were calculated from the concept design and other project costs were estimated as percentages of the "known" quantified items. Items based on percentages of known costs include mobilization, traffic control, temporary drainage and non-quantified minor items (guardrail, miscellaneous utility revisions, etc.). A summary of costs is provided below. See Attachment C for detailed cost estimates.

Table 2. US 10 Concept Alternative Cost Estimates

Alternative	Estimated Cost ($M)
Inside Add Lane	$25.3 M
Outside Add Lane	$24.8 M
Outside Add Lane (westbound only)	$19.4 M
Dynamic Shoulder	$17.9 M

Cost Estimate Details

- Project delivery cost are not included (engineering, construction administration, etc.)
- 20% overall project contingency
- Noisewalls determined to be cost effective are included in the estimate
- Assumes wetland impacts to be mitigated for by purchasing wetland credits
- Cost in 2018 dollars

Potential Cost Estimate Influences

- Soil conditions – potential need for soil correction due to poor soils
- Right of way impacts – potential need to acquire properties to construct ponds / BMP's to meet permitting requirements
- Noisewall voting and process – potential that noisewall voting results in reduced noisewall construction

Findings

The results of the traffic analysis and design evaluation show that there is both a need for additional capacity along this segment of US 10 and that it is feasible to construct without significant impacts. Existing traffic conditions show that congestion is present due to capacity constraints along eastbound and westbound US 10. Travel pattern evaluation also reveals that traffic diversion occurs off of US 10 during times of day when it becomes congested.

Future year forecasts show that traffic demand is anticipated to continue to grow on US 10 and other roadways in the study area. This is expected to lead to increased congestion levels and additional diversion under no build conditions. Extending the six-lane capacity from CSAH 78 to CSAH 9 would relieve the existing over-capacity segments, thereby reducing congestions. In addition, the segment of westbound US 10 to the west of CSAH 9 is not expected to become over capacity under this condition, thus no new bottleneck would be created as a result of the improvement.

The highway design process showed that capacity can be reasonable added to US 10 between CSAH 78 and CSAH 9. This could be accomplished by adding lanes to the inside or outside of existing US 10 lanes without impacting bridges crossing the freeways. Dynamic shoulder lanes could also be feasibly implemented, however there are additional operating considerations that must be taken into account for this concept. The optimal solution is viewed as the outside add-lane option, which reduces the drainage impacts and need for a center median barrier. It also preserves flexibility for future improvements in the median, such as a MnPASS lane.

Next Steps

A series of next steps have been identified to advance improvements to US 10. These include activities of preliminary engineering, environment approvals, final design and permits, right of way acquisition, and construction. Cumulatively, these steps may require two to four years to complete, provided funding is available for each activity. An accelerated schedule is provided in Figure 8 to illustrate the sequence of steps to implement the project in approximately 2.5 years.

Figure 13.Illustrative Schedule for Accelerated Implementation

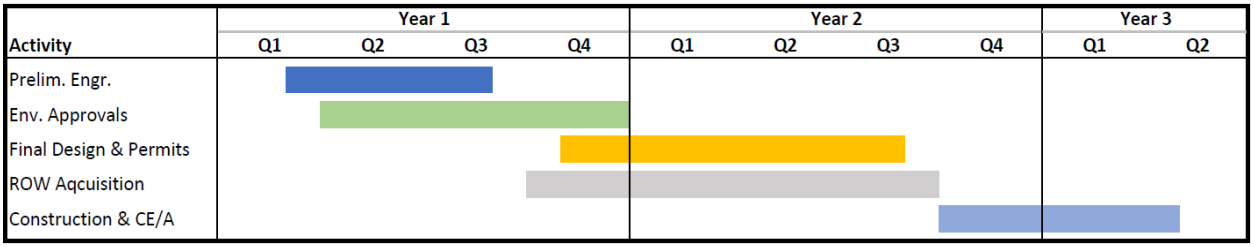

Several other steps required to implement improvements to US 10 involve approvals within the regional transportation planning process. Provided capital funding can be procured, critical milestones for regional approval include:

- Amendment to the Transportation Policy Plan (TPP)
- Inclusion in the State Transportation Investment Plan (STIP)

Successful implementation will require cooperation among project partners at the city, county, state DOT, and regional planning levels.

Attachment A

Existing Roadway and Bridge Typical Sections

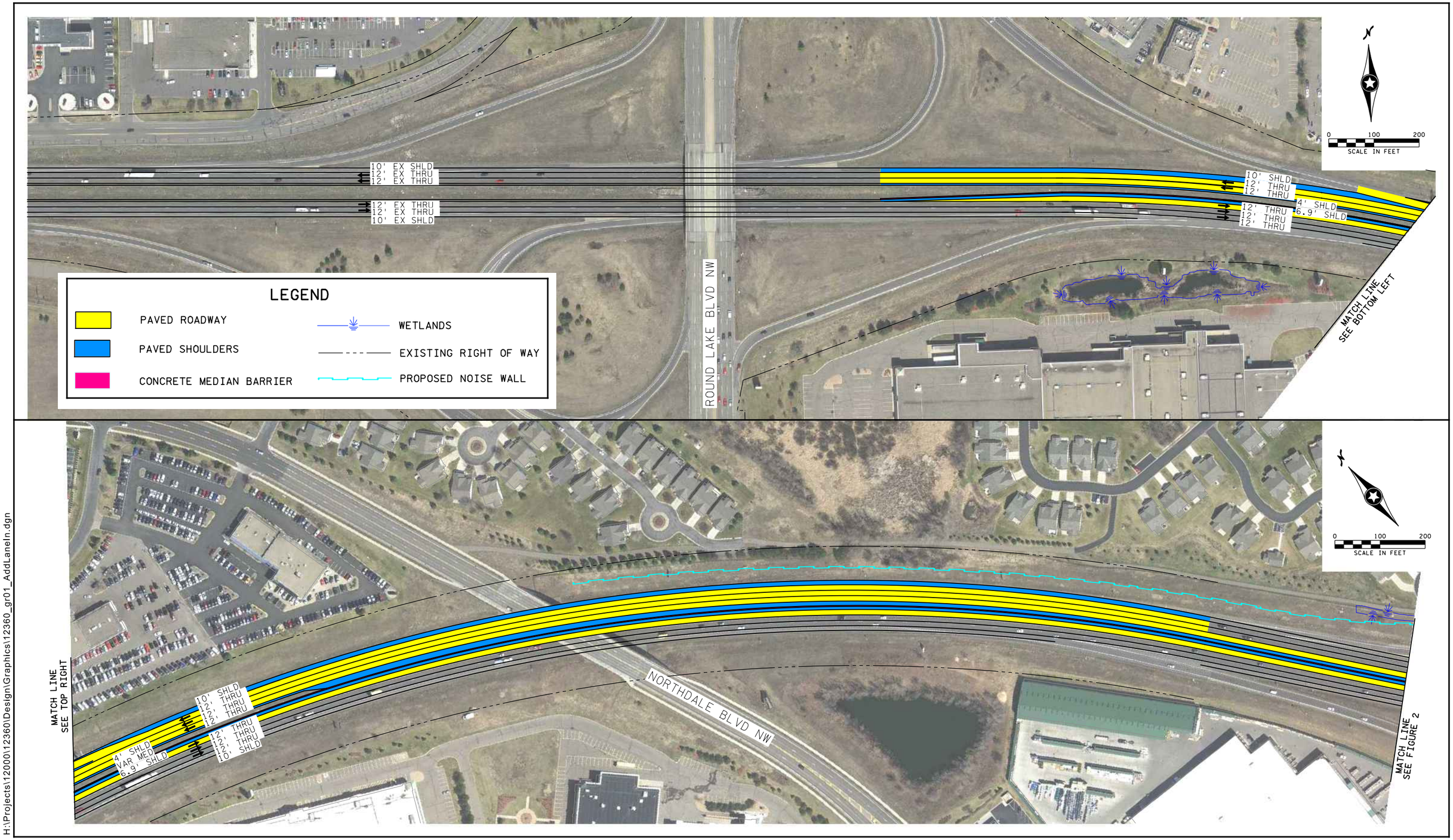

H:\Projects\12000\12360\Design\Graphics\12360_gr01_AddLaneIn.dgn

SRF

US 10 Add-a-Lane from CSAH 78 to CSAH 9

Inside Lane Alternative

Anoka County

Job #12360
7/18/2019

Figure 1

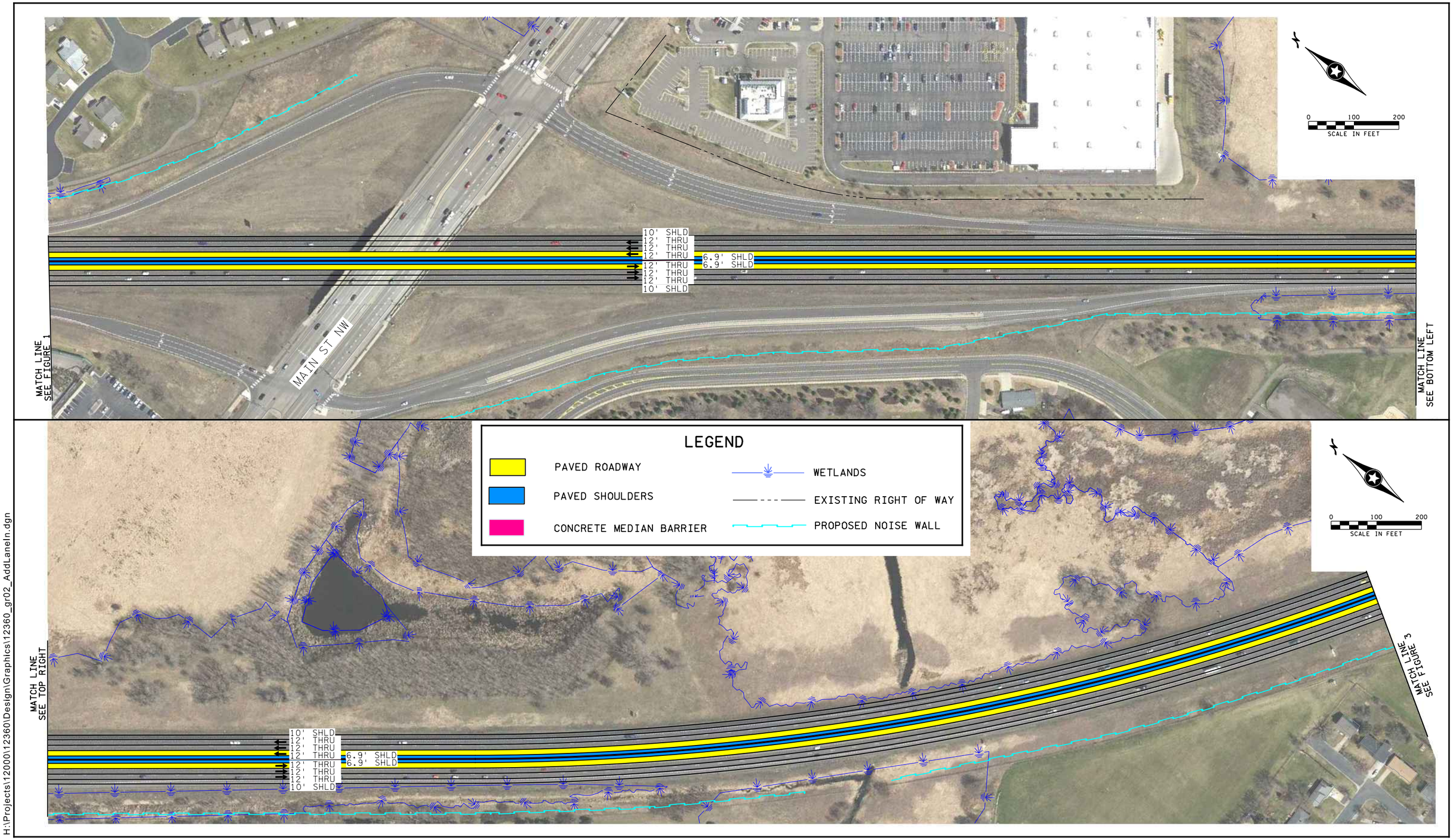

H:\Projects\12000\12360\Design\Graphics\12360_gr02_AddLaneIn.dgn

SRF

US 10 Add-a-Lane from CSAH 78 to CSAH 9

Inside Lane Alternative

Anoka County

Job #12360
7/18/2019

Figure 2

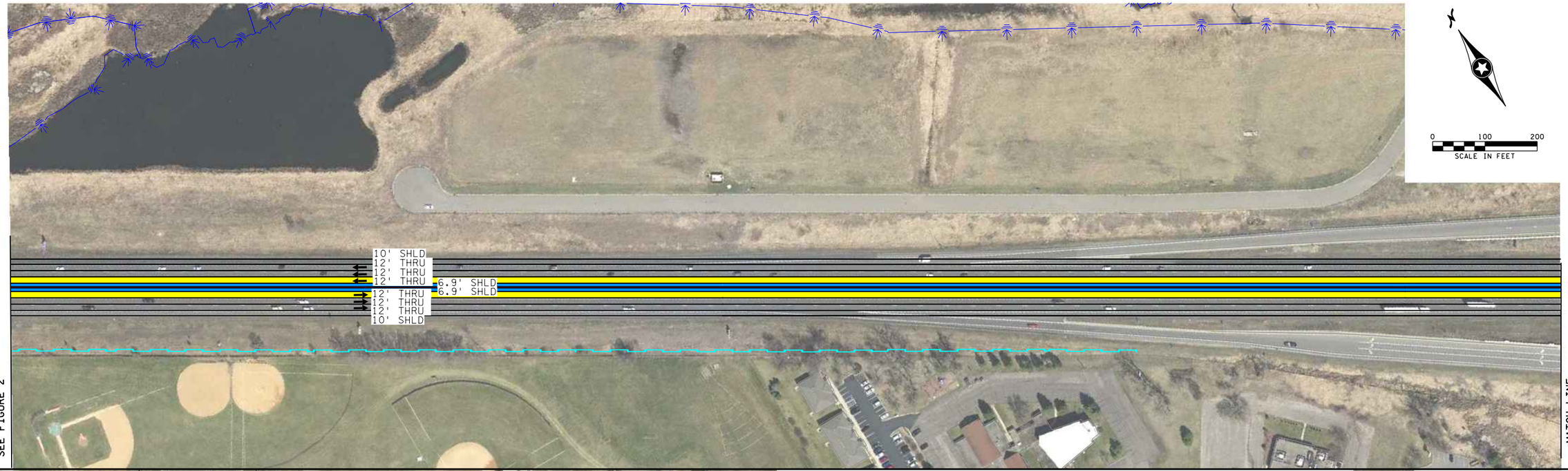

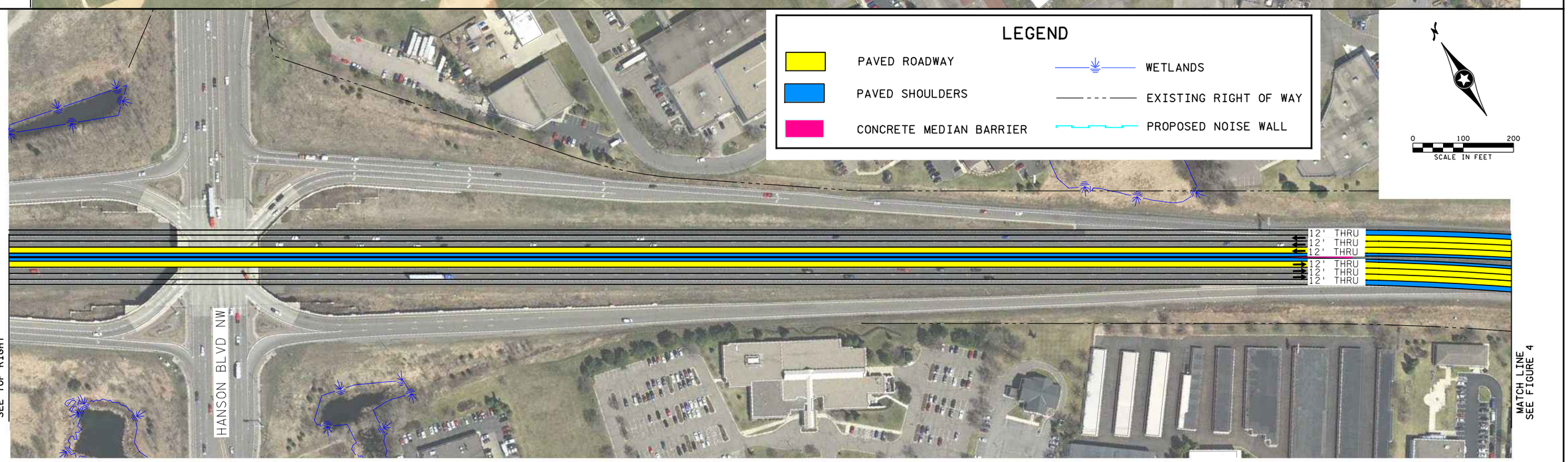

H:\Projects\12000\12360\Design\Graphics\12360_gr03_AddLaneIn.dgn

SRF

US 10 Add-a-Lane from CSAH 78 to CSAH 9

Inside Lane Alternative

Anoka County

Job #12360
7/18/2019

Figure 3

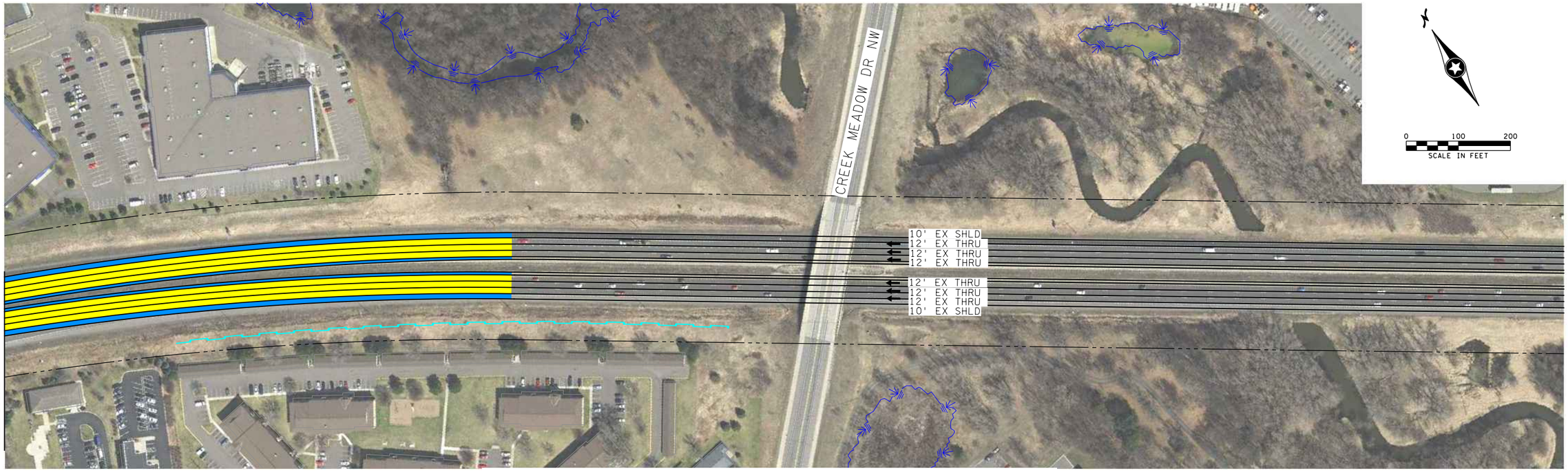

LEGEND

- PAVED ROADWAY
- PAVED SHOULDERS
- CONCRETE MEDIAN BARRIER
- WETLANDS
- EXISTING RIGHT OF WAY
- PROPOSED NOISE WALL

H:\Projects\12000\12360\Design\Graphics\12360_gr04_AddLaneIn.dgn

SRF

US 10 Add-a-Lane from CSAH 78 to CSAH 9

Inside Lane Alternative

Anoka County

Job #12360
7/18/2019

Figure 4

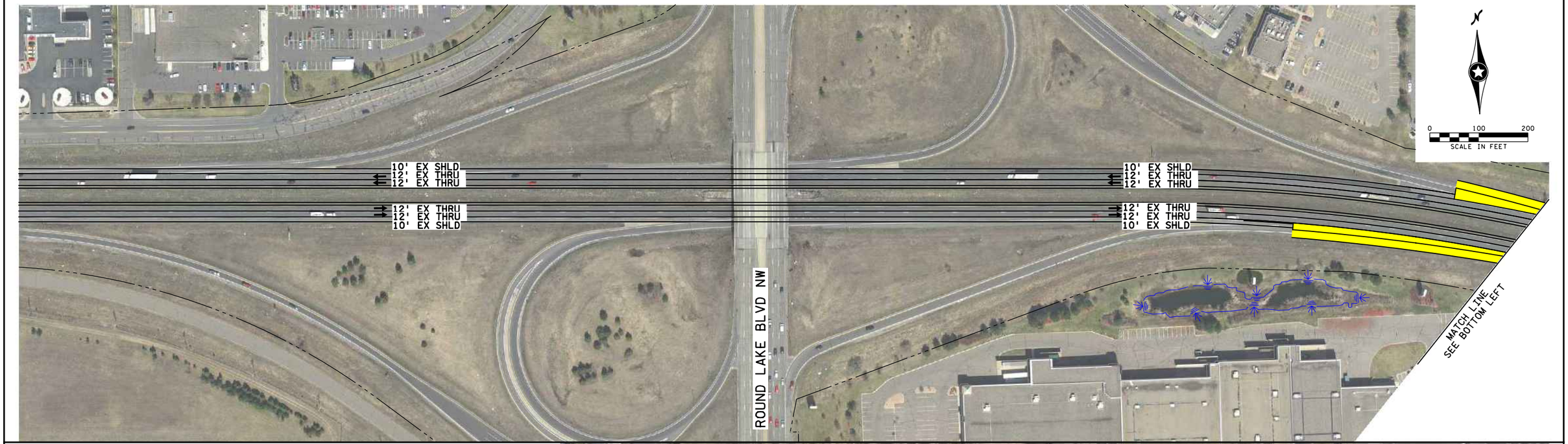

LEGEND

- PAVED ROADWAY
- PAVED SHOULDERS
- CONCRETE MEDIAN BARRIER
- WETLANDS
- EXISTING RIGHT OF WAY
- PROPOSED NOISE WALL

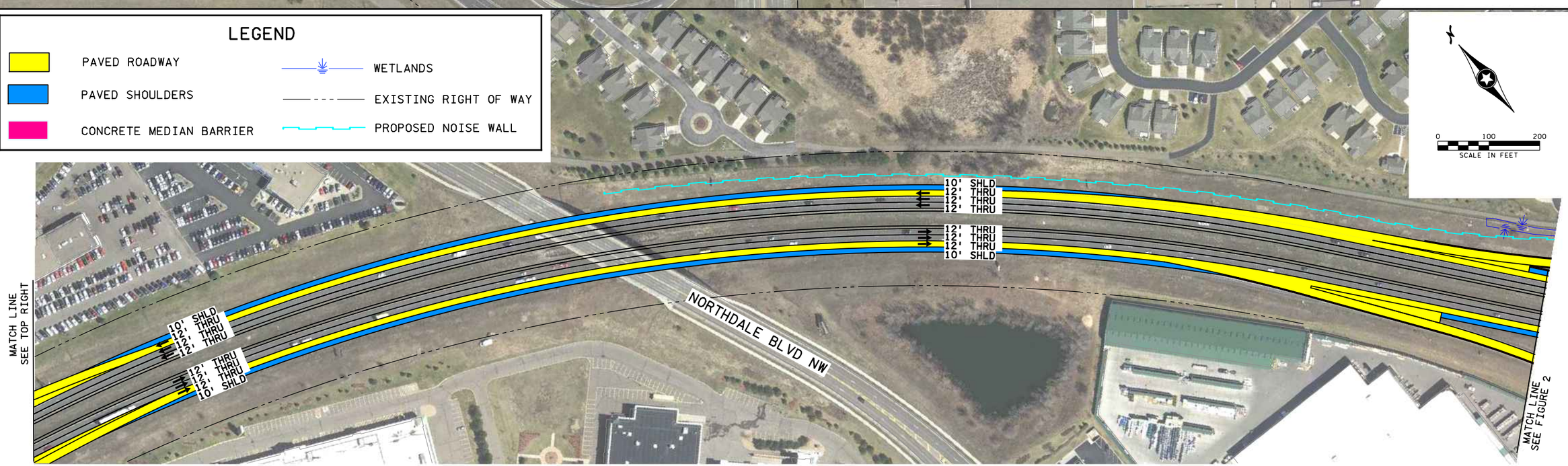

H:\Projects\12000\12360\Design\Graphics\12360_gr01_AddLaneOut.dgn

SRF

US 10 Add-a-Lane from CSAH 78 to CSAH 9

Outside Lane Alternative

Anoka County

Job #12360
7/18/2019

Figure 1

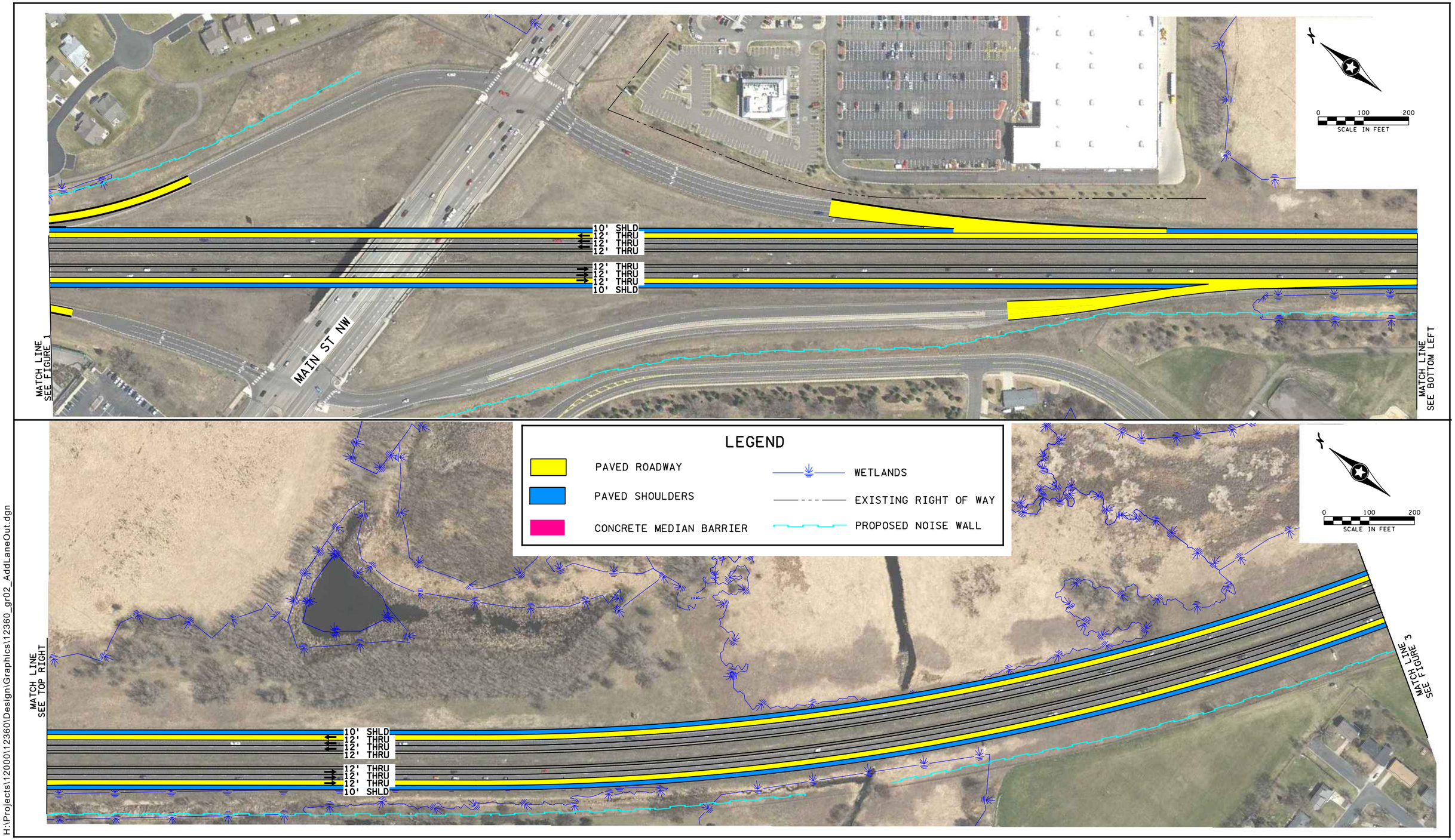

H:\Projects\12000\12360\Design\Graphics\12360_gr02_AddLaneOut.dgn

SRF

US 10 Add-a-Lane from CSAH 78 to CSAH 9

Outside Lane Alternative

Anoka County

Job #12360
7/18/2019

Figure 2

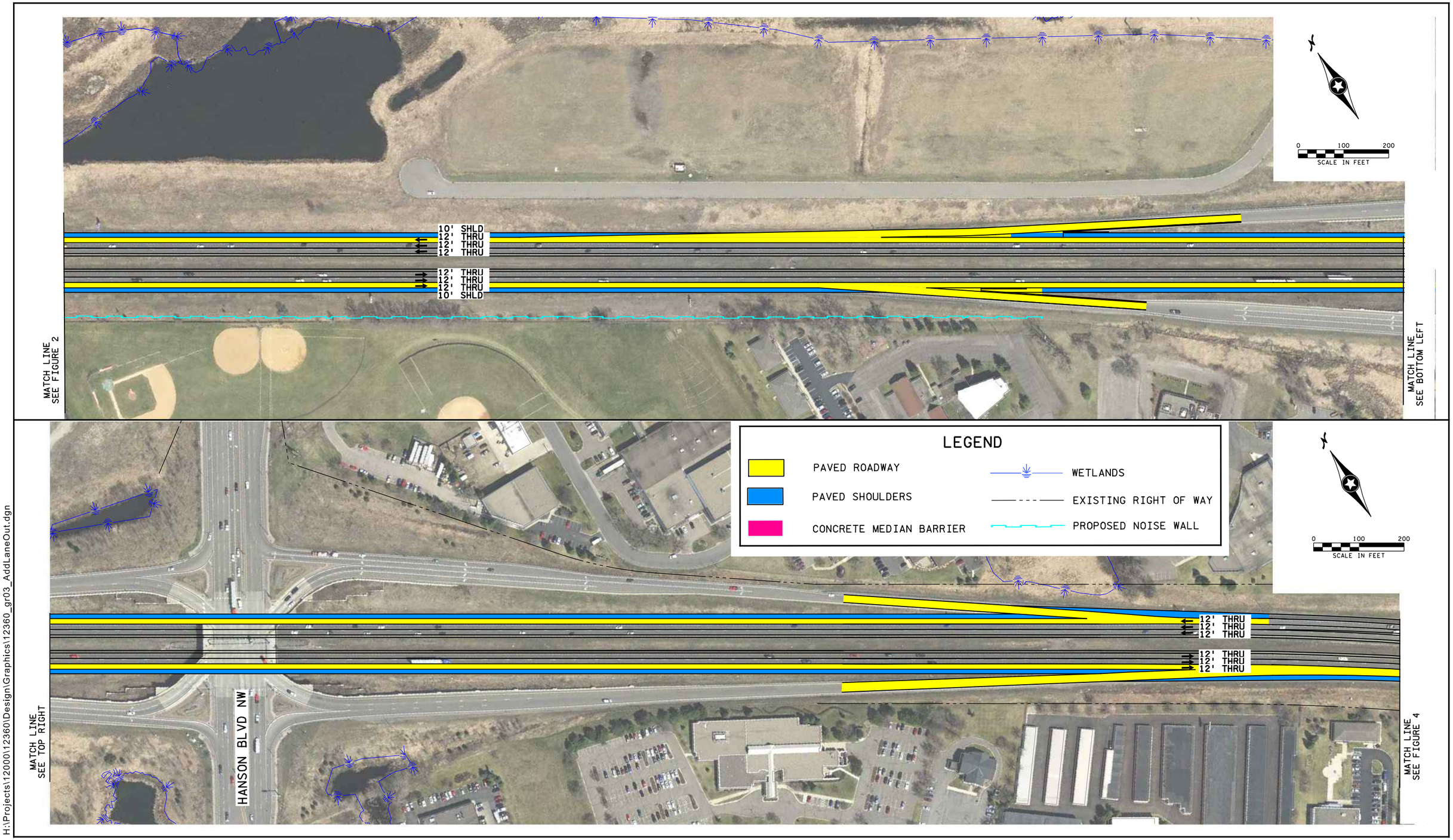

H:\Projects\12000\12360\Design\Graphics\12360_gr03_AddLaneOut.dgn

SRF

TH 10 Add-a-Lane from CSAH 78 to CSAH 9

Outside Lane Alternative

Anoka County

Job #12360
7/18/2019

Figure 3

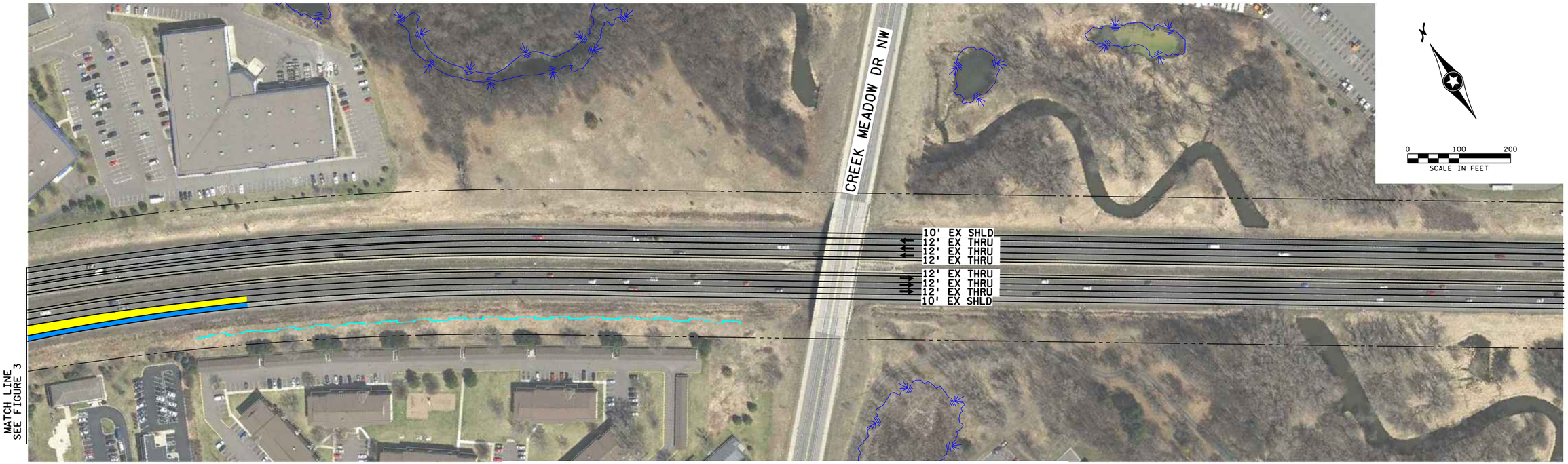

LEGEND

- PAVED ROADWAY
- PAVED SHOULDERS
- CONCRETE MEDIAN BARRIER
- WETLANDS
- EXISTING RIGHT OF WAY
- PROPOSED NOISE WALL

H:\Projects\12000\12360\Design\Graphics\12360_gr04_AddLaneOut.dgn

SRF

TH 10 Add-a-Lane from CSAH 78 to CSAH 9

Outside Lane Alternative

Anoka County

Job #12360
7/18/2019

Figure 4

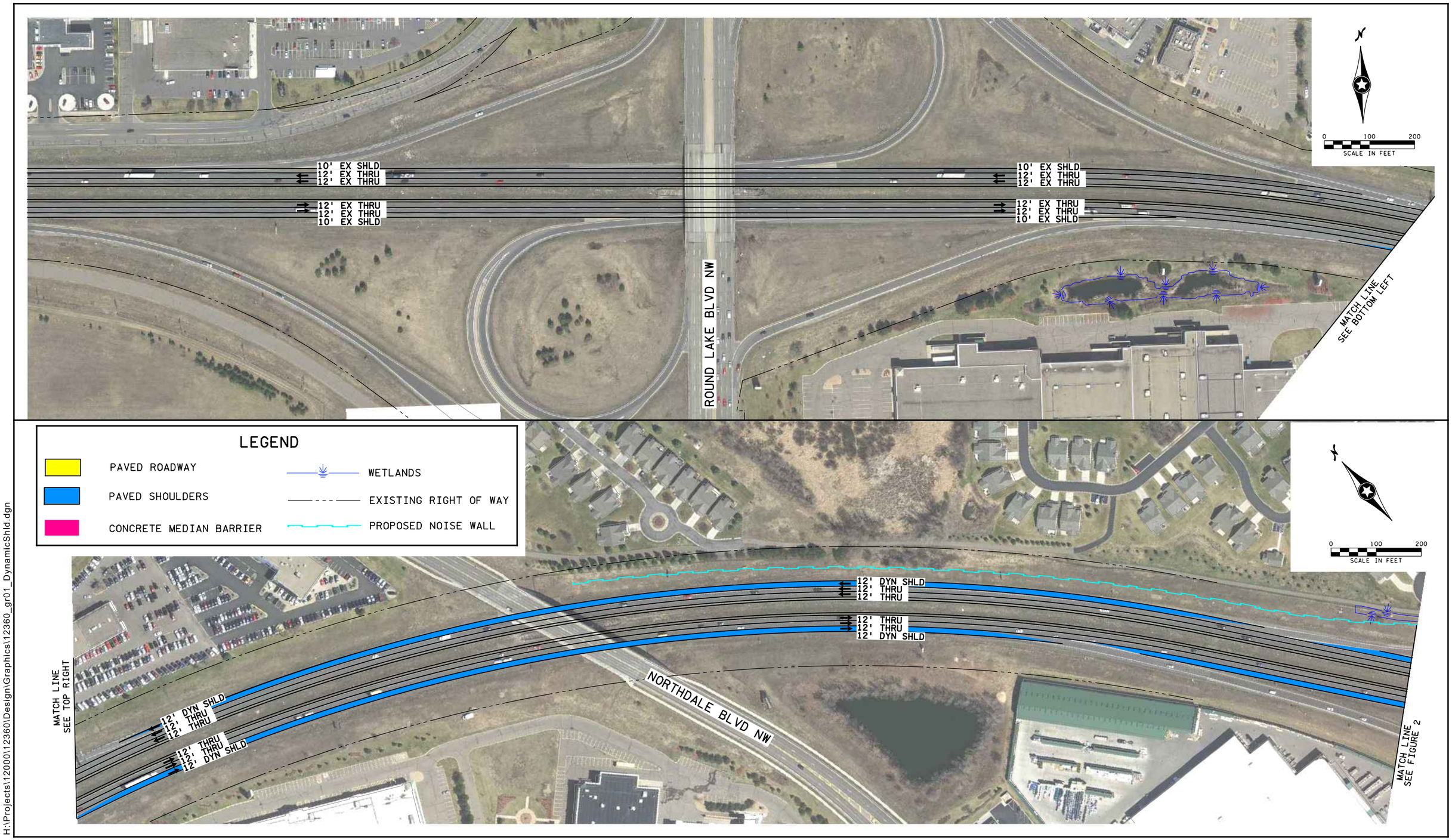

H:\Projects\12000\12360\Design\Graphics\12360_gr01_DynamicShld.dgn

SRF

TH 10 Add-a-Lane from CSAH 78 to CSAH 9

Dynamic Shoulder Alternative

Anoka County

Job #12360
7/18/2019

Figure 1

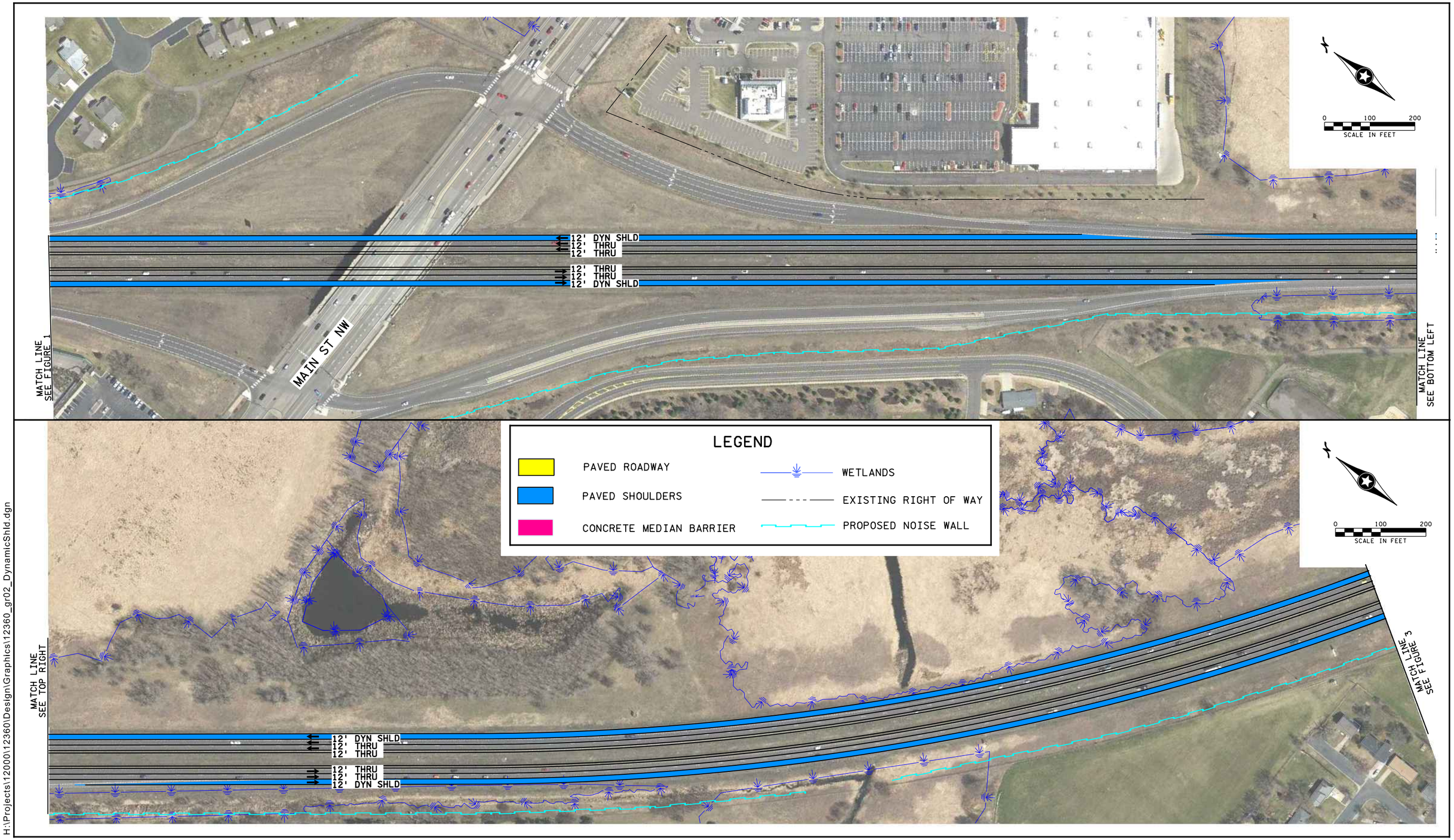

H:\Projects\12000\12360\Design\Graphics\12360_gr02_DynamicShld.dgn

SRF

TH 10 Add-a-Lane from CSAH 78 to CSAH 9

Dynamic Shoulder Alternative

Anoka County

Job #12360
7/18/2019

Figure 2

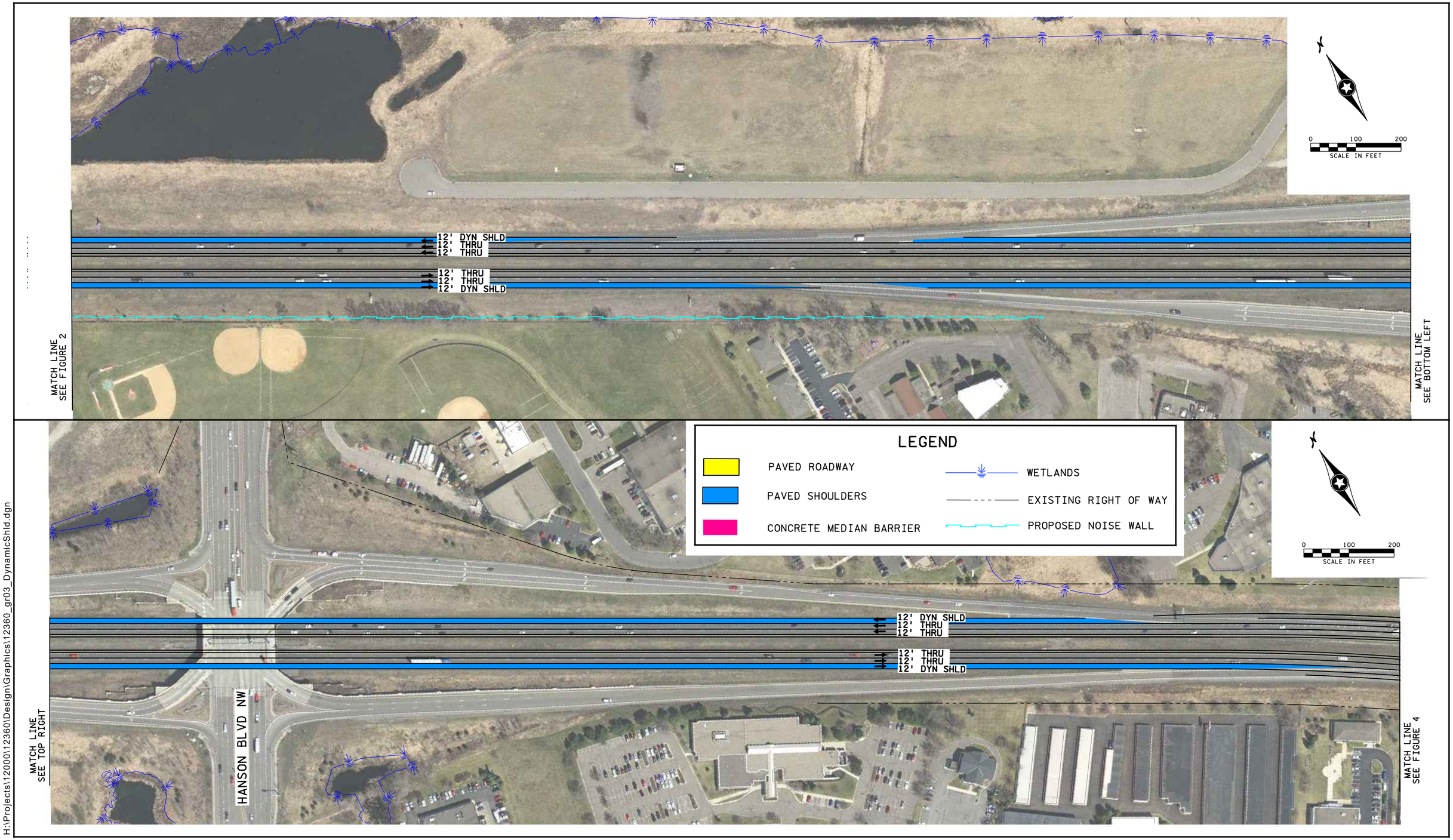

H:\Projects\12000\12360\Design\Graphics\12360_gr03_DynamicShld.dgn

SRF

TH 10 Add-a-Lane from CSAH 78 to CSAH 9

Dynamic Shoulder Alternative

Anoka County

Job #12360
7/18/2019

Figure 3

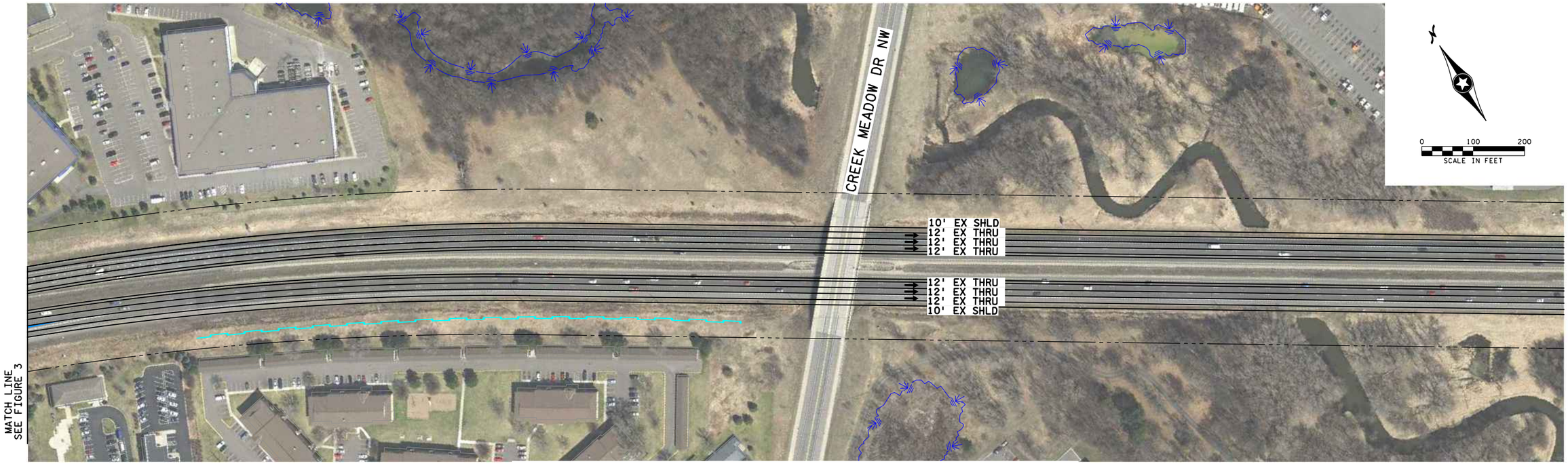

LEGEND

- PAVED ROADWAY
- PAVED SHOULDERS
- CONCRETE MEDIAN BARRIER
- WETLANDS
- EXISTING RIGHT OF WAY
- PROPOSED NOISE WALL

H:\Projects\12000\12360\Design\Graphics\12360_gr04_DynamicShld.dgn

SRF

TH 10 Add-a-Lane from CSAH 78 to CSAH 9

Dynamic Shoulder Alternative

Anoka County

Job #12360
7/18/2019

Figure 4

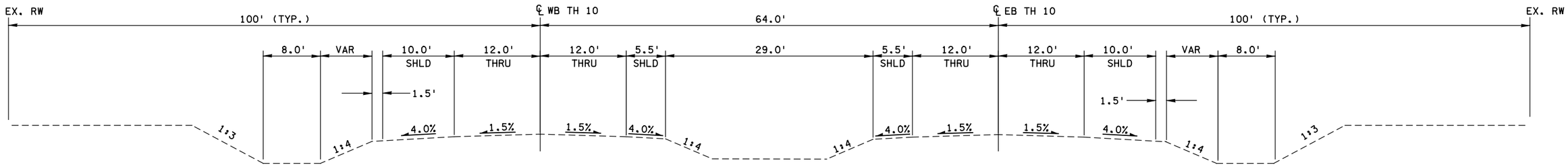

TH 10
EXISTING ROADWAY

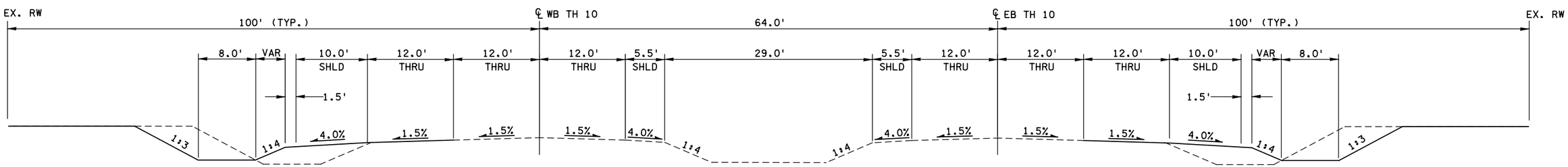

TH 10
PROPOSED ROADWAY - OUTSIDE ADD LANE

H:\Projects\12000\12360\Design\Base\12360_lotsa.dgn

SRF

TH 10 Add Lane Typical Sections

TH 10 - Existing Conditions and Proposed Outside Lane
Coon Rapids, MN

Job #12360
4/4/2019

Figure 1

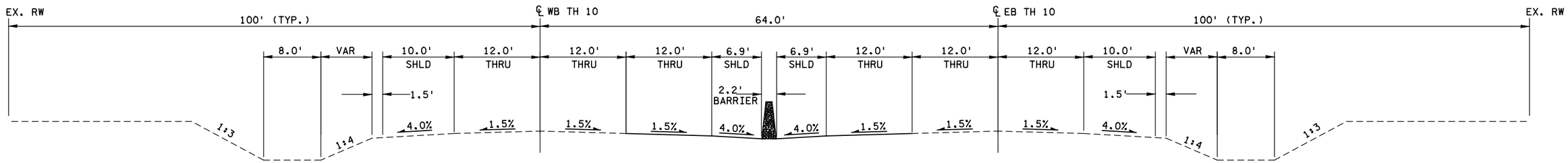

TH 10
PROPOSED ROADWAY - INSIDE ADD LANE

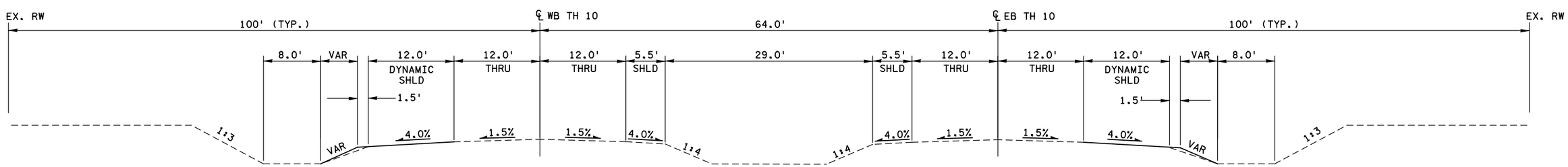

TH 10
PROPOSED ROADWAY - DYNAMIC SHOULDERS

H:\Projects\12000\12360\Design\Base\12360_lotsa.dgn

SRF

TH 10 Add Lane Typical Sections

TH 10 - Proposed Inside Lane and Dynamic Shoulders

Coon Rapids, MN

Job #12360
4/4/2019

Figure 2

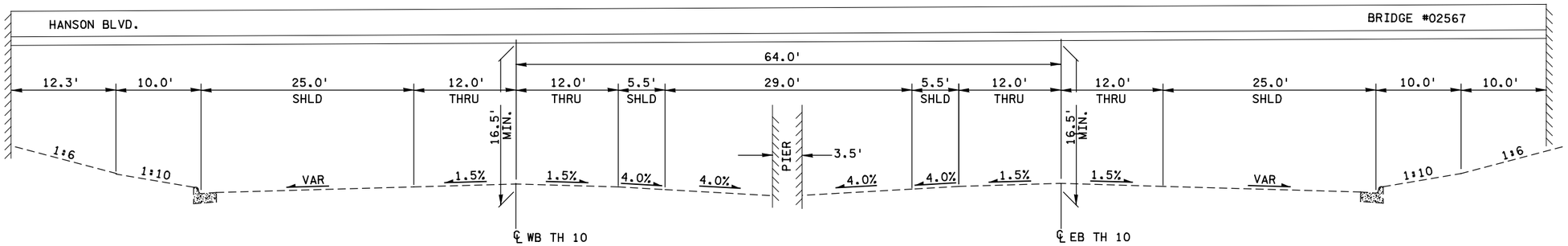

BRIDGE NO. 02567 - HANSON BLVD
EXISTING UNDERPASS

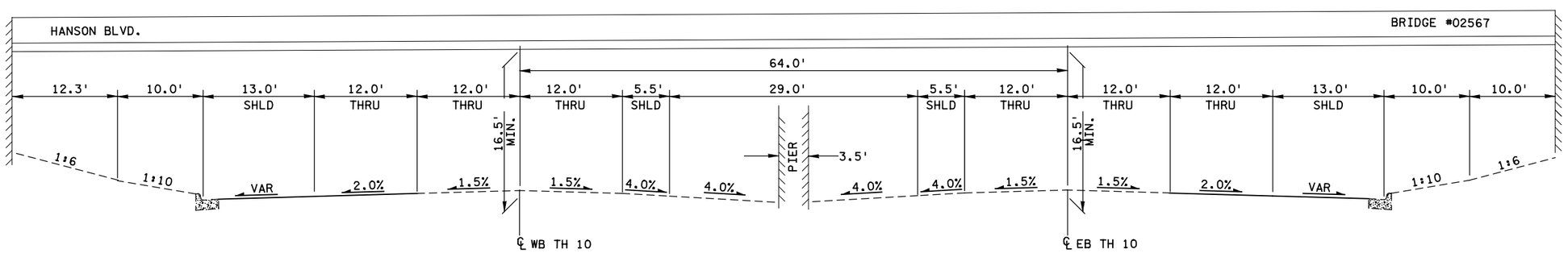

BRIDGE NO. 02567 - HANSON BLVD
PROPOSED - OUTSIDE ADD LANE

H:\Projects\12000\12360\Design\Base\12360_lotsa.dgn

SRF

TH 10 Add Lane Typical Sections

Hanson Blvd - Existing Conditions and Proposed Outside Lane
Coon Rapids, MN

Job #12360
4/4/2019

Figure 3

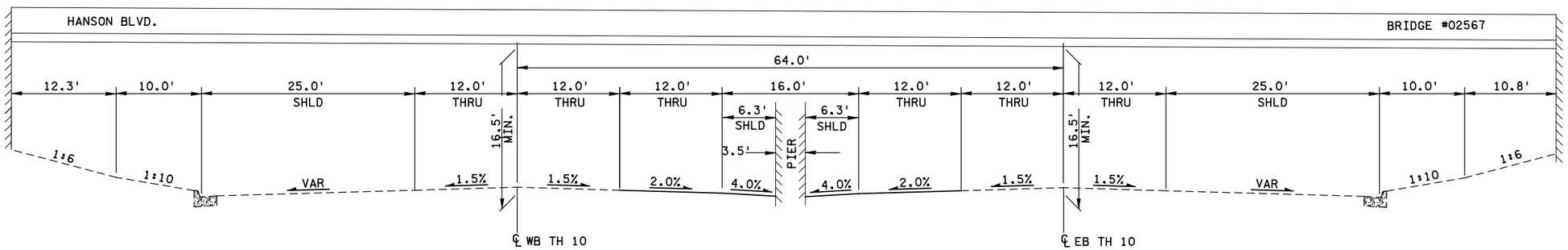

BRIDGE NO. 02567 - HANSON BLVD
PROPOSED - INSIDE ADD LANE

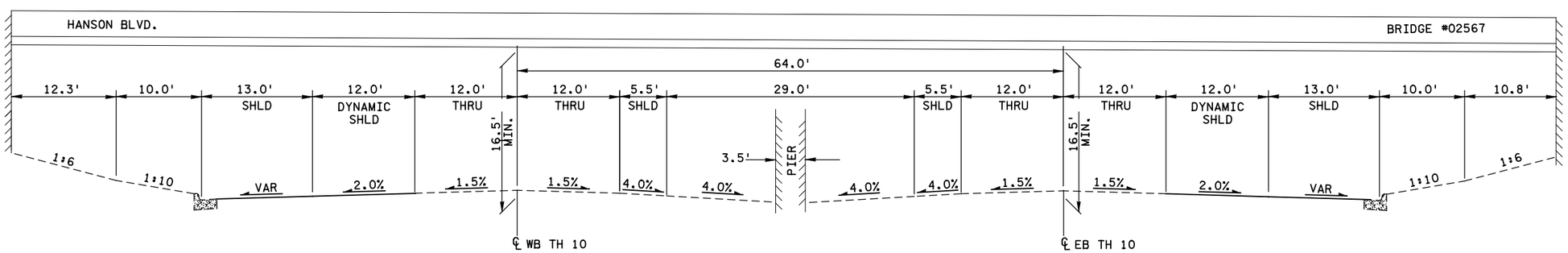

BRIDGE NO. 02567 - HANSON BLVD
PROPOSED - DYNAMIC SHOULDERS

H:\Projects\12000\12360\Design\Base\12360_lotsa.dgn

SRF

TH 10 Add Lane Typical Sections

Hanson Blvd - Proposed Inside Lane and Dynamic Shoulders
Coon Rapids, MN

Job #12360
4/4/2019

Figure 4

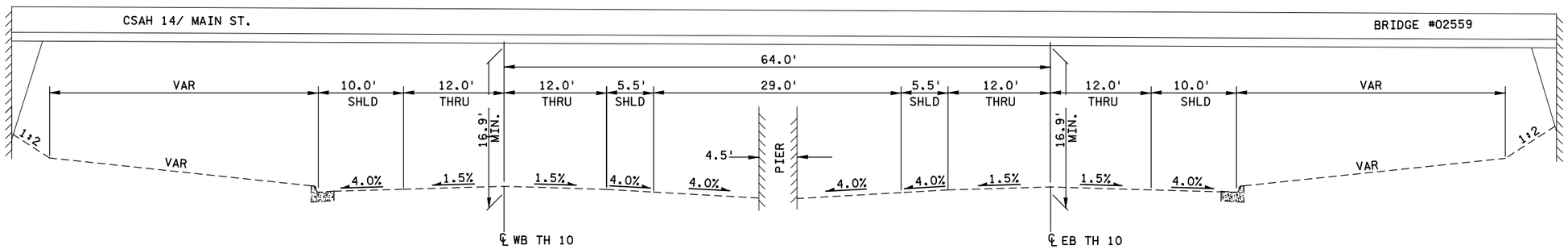

BRIDGE NO. 02559 - MAIN ST
EXISTING UNDERPASS

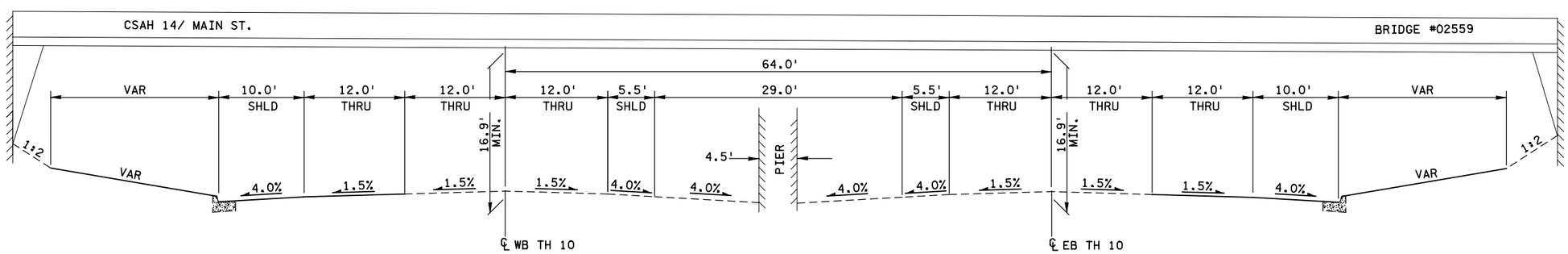

BRIDGE NO. 02559 - MAIN ST
PROPOSED - OUTSIDE ADD LANE

H:\Projects\12000\12360\Design\Base\12360_lotsa.dgn

SRF

TH 10 Add Lane Typical Sections

Main St - Existing Conditions and Proposed Outside Lane

Coon Rapids, MN

Job #12360
4/4/2019

Figure 5

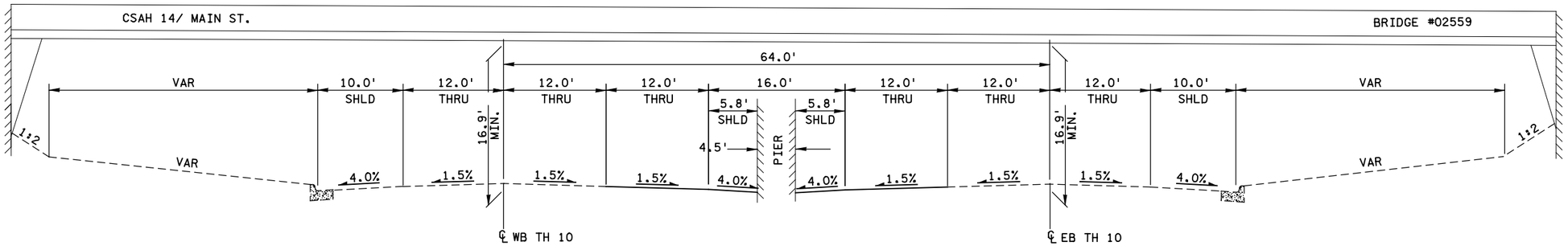

BRIDGE NO. 02559 - MAIN ST
PROPOSED - INSIDE ADD LANES

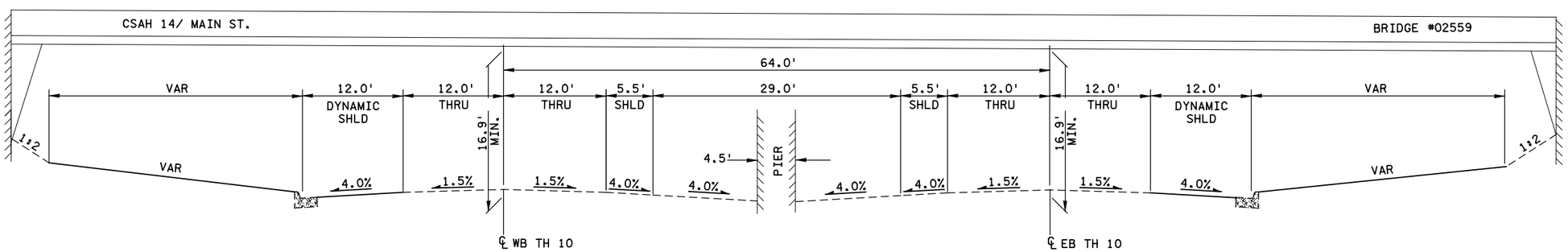

BRIDGE NO. 02559 - MAIN ST
PROPOSED - DYNAMIC SHOULDERS

H:\Projects\12000\12360\Design\Base\12360_lotsa.dgn

SRF

TH 10 Add Lane Typical Sections

Main St - Proposed Inside Lane and Dynamic Shoulders

Coon Rapids, MN

Job #12360
4/4/2019

Figure 6

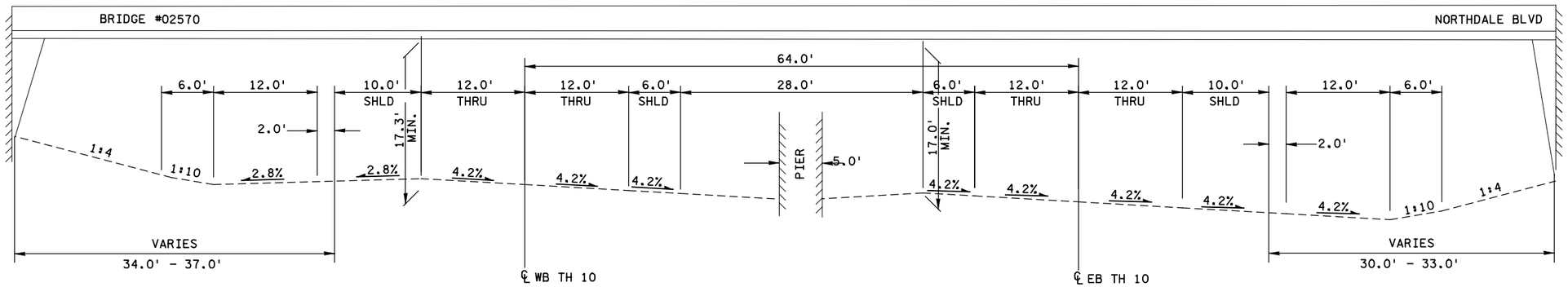

BRIDGE NO. 02570 - NORTHDALE BLVD
EXISTING UNDERPASS

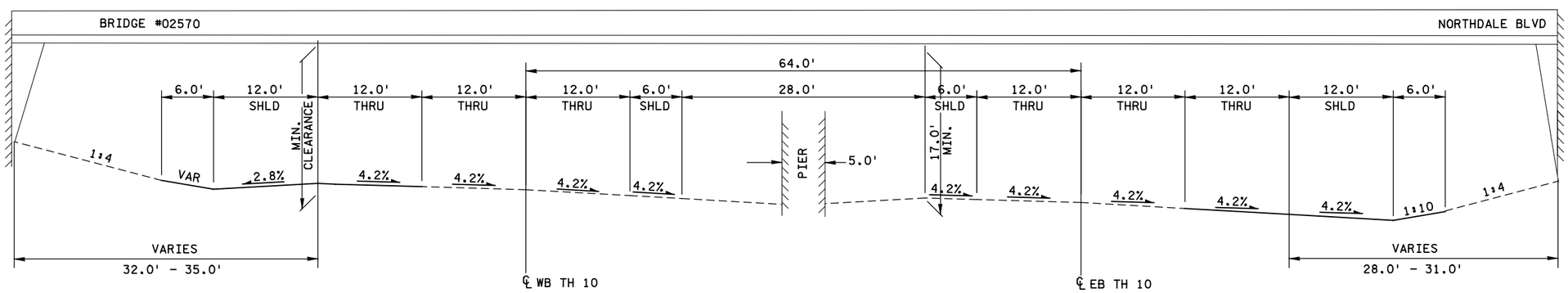

BRIDGE NO. 02570 - NORTHDALE BLVD
PROPOSED - OUTSIDE ADD LANE

H:\Projects\12000\12360\Design\Base\12360_lotsa.dgn

SRF

TH 10 Add Lane Typical Sections

Northdale Blvd - Existing Conditions and Proposed Outside Lane
Coon Rapids, MN

Job #12360
4/4/2019

Figure 7

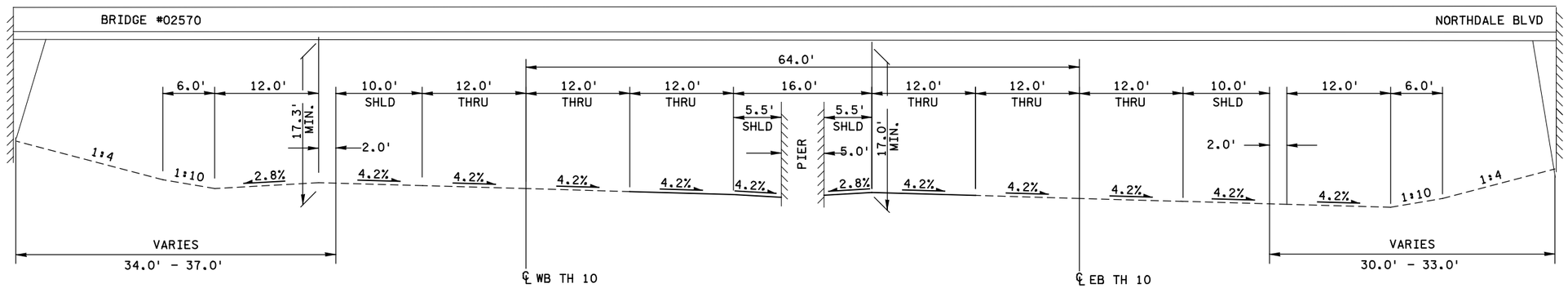

BRIDGE NO. 02570 - NORTHDALE BLVD
PROPOSED - INSIDE ADD LANE

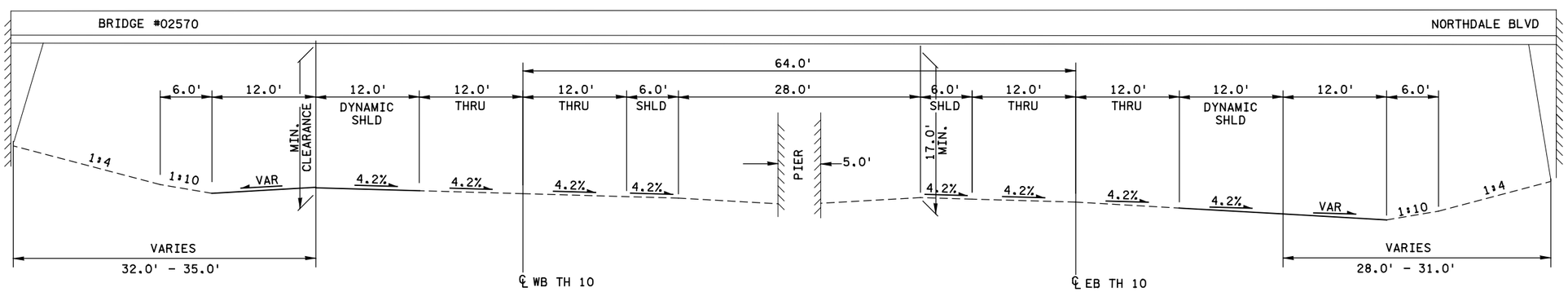

BRIDGE NO. 02570 - NORTHDALE BLVD
PROPOSED - DYNAMIC SHOULDERS

H:\Projects\12000\12360\Design\Base\12360_lotsa.dgn

SRF

TH 10 Add Lane Typical Sections

Northdale Blvd - Proposed Inside Lane and Dynamic Shoulders
Coon Rapids, MN

Job #12360
4/4/2019

Figure 8

Attachment B

Traffic Analysis Technical Memorandum

Technical Memorandum

SRF No. 12360

To: Jack Forslund, Transportation Planner
Anoka County Transportation Division

From: Paul Morris, PE, Principal
Krista Anderson, PE, Senior Traffic Engineer
Pratik Srivastava, Traffic Engineer
Jacqueline Nowak, Traffic Engineer

Date: August 27, 2019

Subject: US 10 Add-a-Lane from CSAH 78 to CSAH 9
Traffic Analysis Technical Memorandum

Introduction

This memorandum documents the analysis completed for the US 10 Add-a-Lane study from CSAH 78 to CSAH 9. The traffic analysis investigated several topics regarding conditions on US 10. The first was a series of traffic pattern analyses using StreetLight Insights, a platform that provides access to GPS data of vehicle movements. Second, a number of traffic forecasts were prepared using Anoka County's version of the regional activity-based travel demand model. These forecasts reflect year 2040 conditions for no build and build options on US 10. Forecasts were also prepared for construction conditions of several regional projects anticipated during upcoming construction seasons. The results of these analyses are an important input to the broader investigation of the feasibility and benefits of adding capacity to US 10 in the study area.

Key Findings of Analysis

The analysis completed for the US 10 study revealed a number of important findings regarding traffic movements and future demand in the study area. The following highlights summarize these findings from the StreetLight travel pattern and traffic forecasting evaluations.

StreetLight Evaluation

- The majority of trips using US 10 through the study area are regional trips, with overall length greater than 10 miles, and origins and destinations outside of the study area communities.
- Traffic diversion off of US 10 is observed on Coon Rapids Boulevard, particularly for trips using the TH 610 Mississippi River crossing and is more pronounced during peak periods.

- Traffic on westbound US 10 with destinations to the north are observed to exit the freeway early at Hanson Boulevard rather than downstream at Round Lake Boulevard as congestion grows during the PM peak period.

Year 2040 Traffic Forecasts

- Traffic volumes are anticipated to grow on US 10 in the study area under No Build conditions, which would produce increases in congestion compared to existing conditions.
- Added capacity on US 10 between Hanson Boulevard and Round Lake Boulevard is expected to result in higher volumes in the project area as traffic shifts back to the freeway from local diversion routes but is not likely to result in large increases away from the project area.
- During peak periods, the current bottleneck on westbound US 10 at Hanson Boulevard would be alleviated by expanding capacity to the west. Forecast traffic volumes at Round Lake Boulevard – where US 10 would transition back to four lanes – would be lower than existing volumes at Hanson Boulevard.

Construction Traffic Impacts

- Several major regional construction projects are not anticipated to have major impacts to US 10 through Coon Rapids, including I-35W North MnPASS, TH 252 freeway conversion, and US 169 in Elk River.
- Construction on I-94 in Hennepin and Wright Counties is projected to have a modest increase of approximately 3,000 vehicles per day on US 10.
- Construction on US 10 at the Rum River bridge and grade separations to the west will impact 7th Avenue and Round Lake Boulevard, with potentially significant increases on traffic using the north approaches and east ramps of these interchanges with US 10.

Data Collection

Travel demand model validation and freeway operations analysis will use freeway volumes from October 2018, obtained from loop detector data available through MnDOT's Data Extract tool. Balanced daily and peak period traffic flows were generated from this data along all freeway segments of US 10 between Foley Boulevard and Main Street (west of Rum River). Existing daily volumes are provided on the map in Figure A-1, and peak hour volumes are provided in Table B-1.

Figure 1: Data collection Locations

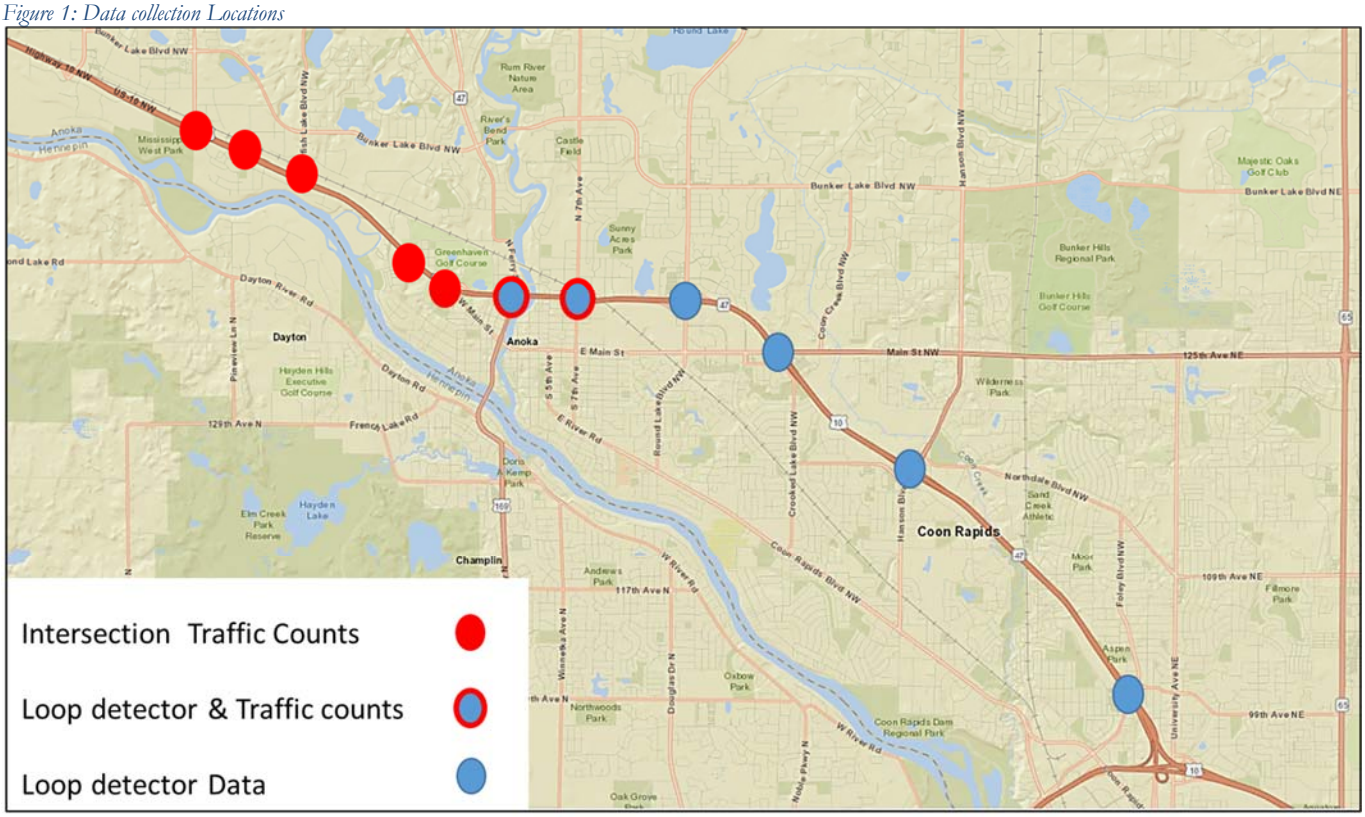

StreetLight Travel Pattern Analysis

Background

Travel pattern analysis on US 10 was carried out to understand and verify it with the real-world data. US 10 is a freeway in Anoka County and passes through the northern suburbs of Minneapolis and St. Paul, so it was important to understand the present-day usage of US 10 and nearby roadway in the Anoka County. The analysis was focused on evaluating the traffic on US 10 and other parallel routes and measuring the diversion off the freeway to assess the true demand in the region. Traffic on arterials such as Round Lake Boulevard and Hanson Boulevard near US 10 were also counted to check the diversion from US 10 along those roadways.

StreetLight Parameter Setup

StreetLight Insight data incorporates information from third-party smartphone weather apps, food delivery apps, and other apps with location components (about 300 in all) and on-board navigation, GPS services app, delivering a nearly real-time look of a region's traffic. The data is anonymized to protect users' privacy — StreetLight Data only sees a randomized device number. As a brief background into StreetLight Data and its sources, this platform provides an on-demand mobility analytics to perform a variety of transportation related analyses using "Big Data". It then applies algorithms to determine things like the percentage of travelers commuting from one city to another, those travelers' final destinations, and the highway facilities they are observed to use. Some analyses use location-based services data, while others use navigation-GPS data. For the O-D analysis, navigation-GPS data was used, which is collected from cars and trucks with on-board GPS devices and smart phones with navigation guidance apps.

The StreetLight O-D Analysis was set up using several of the StreetLight features to capture either needed travel patterns. Data setup was customized to fit the needs of the analysis, with specific parameters including data period, trip type, day type, and time of day. StreetLight is a "Big Data" resource with records dating back to 2014, enabling a larger time span sampling for all hours of the day. Analysis included the use of data for all month of 2018 for average weekday trips (Monday-Thursday) during a full 24-hour time period for each day. For StreetLight data extraction, the following parameters were used to compile project specific data.

Table 1 StreetLight analysis details

StreetLight Parameters	Parameter Details
Project Type	O-D Analysis O-D Analysis with Middle Filters Zone-Activity Analysis
Data Period	January- December 2018
Day Type	Average Day (M-Sun) Average Weekday (M-Thu) Average Weekend (Sa-Sun)
Day Part	All Day (12am-12am) Mid-Day (9am-3pm) Early AM (12am-6am) Peak PM (3pm-6pm) Peak AM (6am-9am) Late PM (6pm-12am)

Glossary of typical terms used in StreetLight analysis

- LBS Data: Location-Based Service data; created by smart phone applications that use location-based services.
- GPS Data: Global Positioning System; created by connected cars/trucks, smart phones with GPS navigation, and commercial fleet management systems.
- Zones: a geospatial shape or polygon that represents an area to be analyzed, can range in size from city blocks to up to a city or county.
- Pass-Through or Roadway Gate: a small zone on a roadway segment to obtain trips crossing the "gate" by direction; only available with GPS data due to spatial limitations of LBS data.
- Origin Zone: A zone in which a trip starts or initially passes through.
- Destination Zone: A zone in which a trip ends or later passes through.
- Middle Filter: A zone that trips pass-through between an origin and destination zone
- Trip (GPS): A trip is required to be at least 3 minutes of time and 500 meters in length; a trip is considered stopped when the device does not move 5 meters within 5 minutes or when a device is turned off.
- Trip (LBS): Incoming data is more variable that GPS. A trip is considered if pinging data is 100m+ from the prior location and stays virtually still for 5 minutes. For continuous pinging devices, if the device slows down to walking speeds and speeds up or stays virtually still for 5 minutes.
- Trip Counts: The number of trips counted in the data pull.
- StreetLight Index (Still Index): A normalized number of trips based on all available data. The normalized index is recommended by StreetLight as their sample size and data increases every month and the normalization allows capture of monthly and seasonal variations.

StreetLight O-D Analysis Set Up

Major cities in Anoka county around US 10 are used as the starting point for the O-D analysis. The zones were aggregated into StreetLight O-D areas to best match the city limits for comparison and analysis purposes. Local trips were defined as those who have an origin or destination within the study area (Trip length <5 miles), while Regional trips were defined as those that have neither an origin nor destination within the defined study area (Trip length >5 Miles). The defined study area included the following Cities:

(1) Ramsey, (2) Anoka, (3) Andover, (4) Coon Rapids, (5) Spring Lake Park (6) Blaine, (7) Champlin* and (8) Mounds View*.

Figure 2: City Zones for US 10 StreetLight Analysis

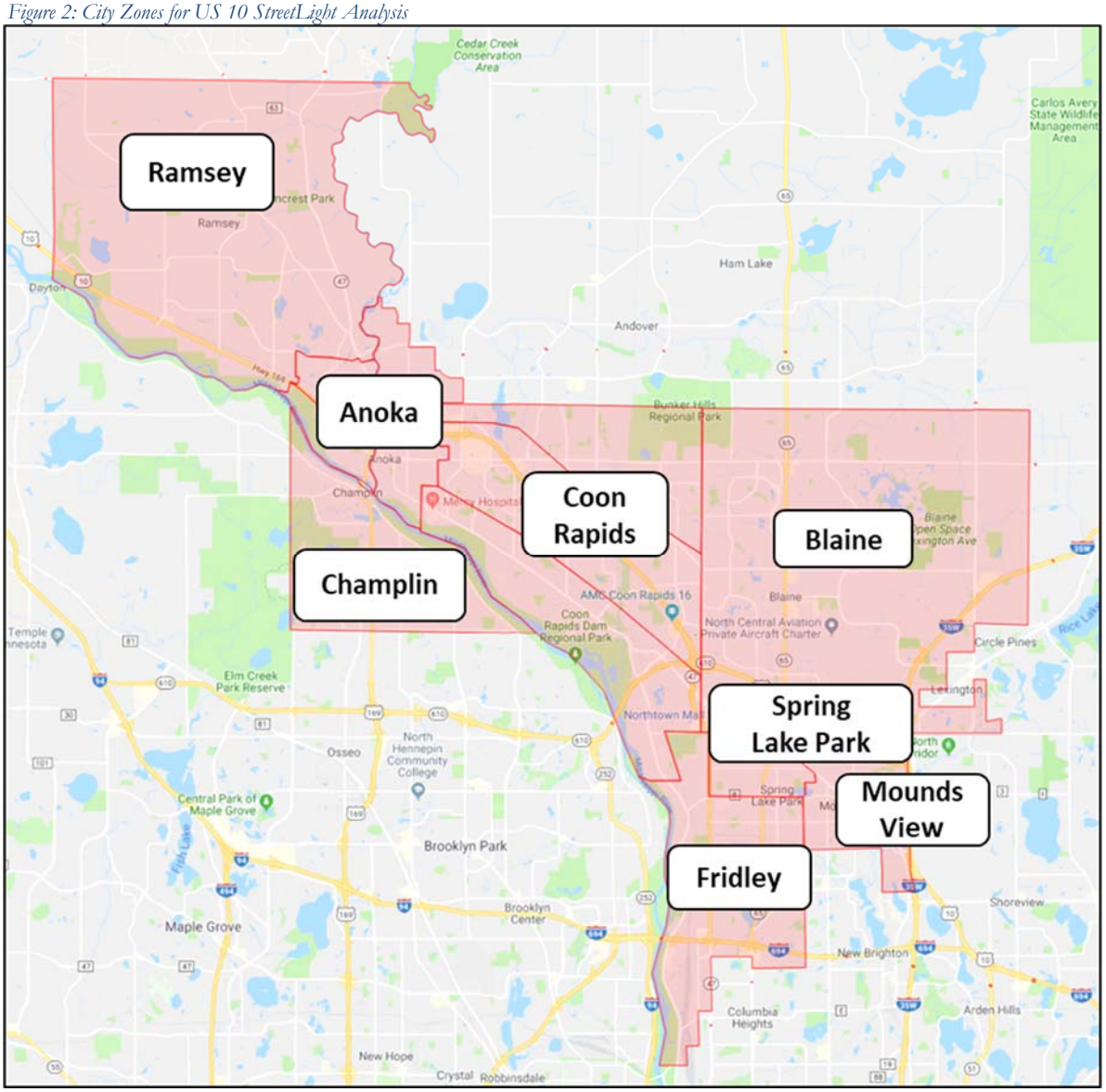

*Not part of Anoka county

Nature of trips: Regional or Local?

Origin-Destination analysis was performed to determine the attribute of trips during AM period in the study area. Origin-destination data was analyzed for AM peak period. Anoka and Ramsey were set as our origin zones and all the trips starting from these zones are accounted and major destination zones were determined for those trips. Initial data shows that almost half of trips starting from these zones pass through and travel outside the study area whereas less than forty percent of trips end in adjacent zones or neighboring city limit, as shown in Figure 3. After looking at the nature of all the trips in the area, overall travel pattern of trips in the study area can be termed as regional trips, traveling 10+ miles every day.

Figure 3: Travel Patterns for Trips from Anoka, Ramsey and further west

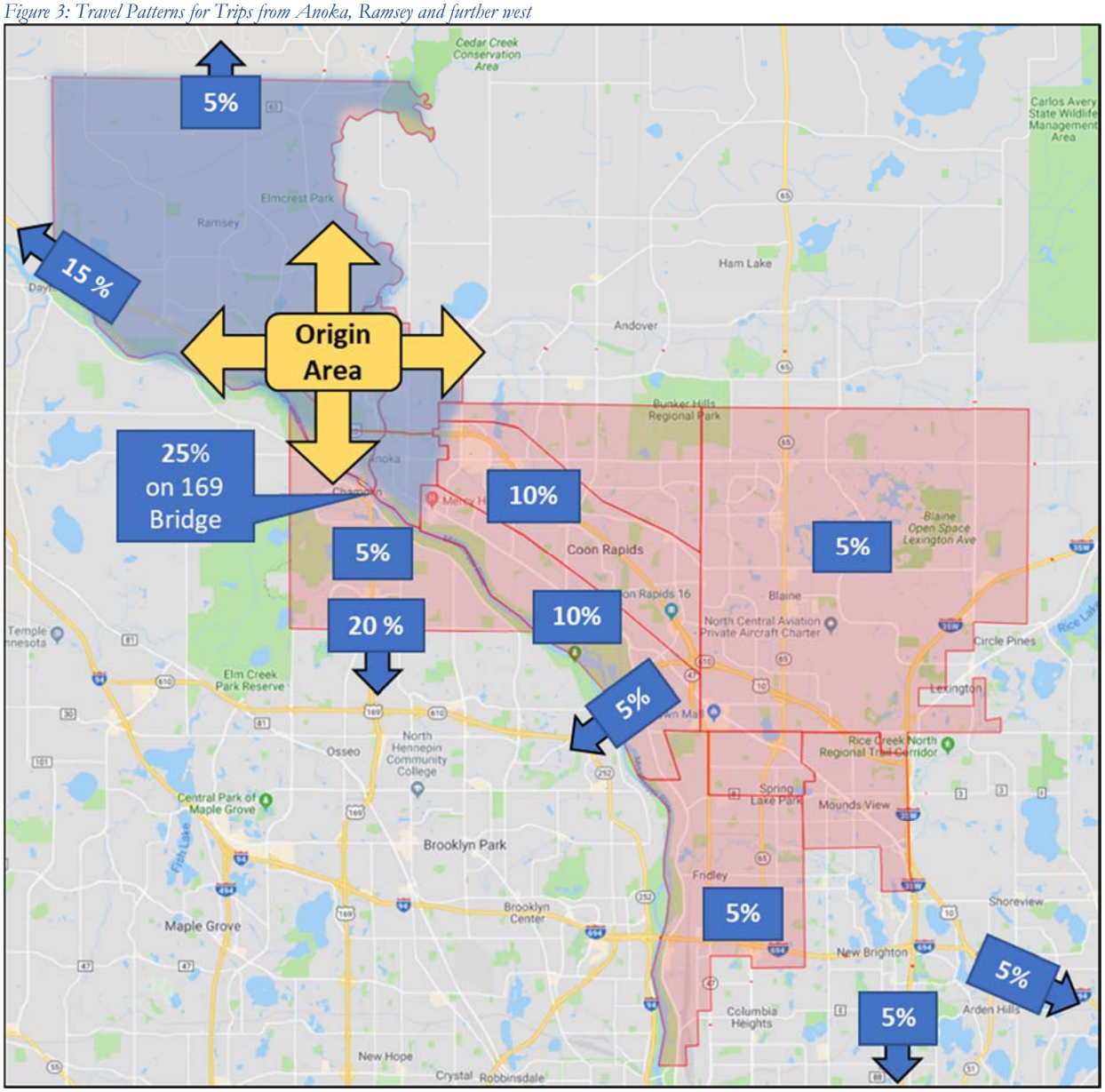

Major Origin: Destination Location using US 10

Once the nature of trips in the study area was analyzed using the O-D data. Next step was to determine the percentage of those trips are using US 10. To investigate is an origin- destination analysis with middle filter on US 10 was used. In an origin-destination with middle filter project type, all the trips starting from origin zone must pass through middle filter before ending at the destination zone. In this case a middle filter on US 10 near Hanson Boulevard was placed, to account for all the trips using the US 10 while traveling between O-D pairs. All the trips passing through the I-694 & I-35W interchange was chosen as the origin zone. The data reveals that significant portion of trip on US 10 ends in the region Coon Rapids, Anoka, and Ramsey city limits while almost one third of trips travel west or Ramsey and north of Coon Rapids. Region travel pattern can be seen on US 10 as majority of trips end or pass through the gates in the study area have origin east of I-694 and I-35W making total travel length more than 10 miles.

Figure 4: Travel Pattern for trips to/from I-694 & I-35W Interchange

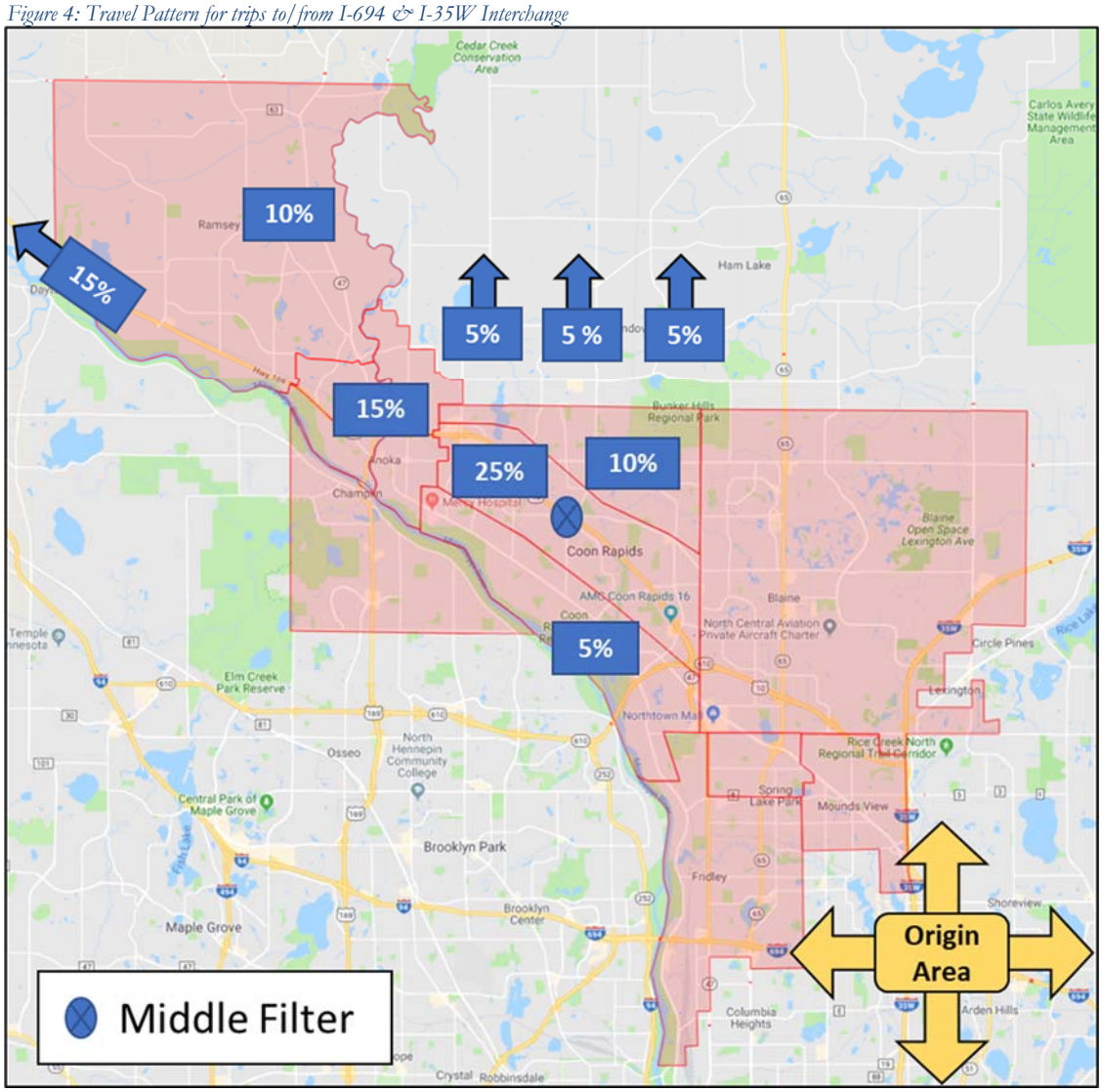

Traffic on Parallel Route- Coon Rapids Boulevard

In order to analyze the trips using Coon Rapids Boulevard, origin-destination analysis with a middle filter was used to identify trips on this roadway. For this analysis two middle filters were used, one at US 10 the one at Coon Rapid Boulevard and trips were for AM peak period. The data reveals that a large portion of trips starting in Ramsey and Anoka are using Coon Rapids Boulevard ends in southern part of the Coon rapids and other destinations zones are Blaine, Mounds View, Fridley and Spring Lake Park. Data also shows about 30% of trips on Coon Rapids Boulevard crosses the 610 bridge and travels south whereas approximately half of the trips on the US 10 travel east of Mounds View, which supports the previous finding that trips on US 10 are regional in nature. Data reveals fewer trips from US 10 use the 610 bridge to cross the bridge and travel south as compared to the Coon Rapids Boulevard. It can be a possible case that US 10 is congested and trips divert to Coon Rapids Boulevard to travel south.

Figure 5: Comparison of Ramsey and Anoka trips using US 10 versus Coon Rapids Boulevard

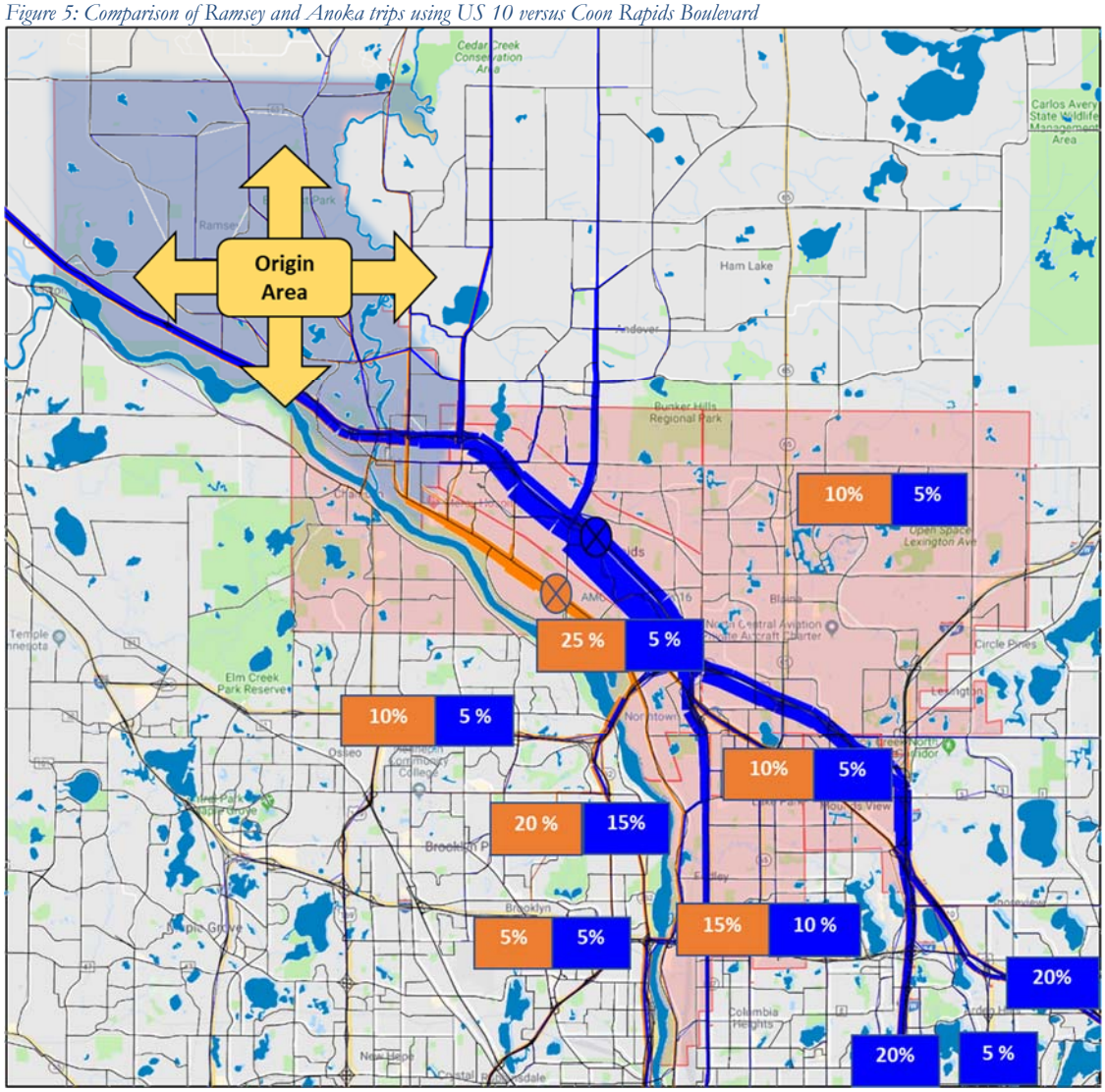

Traffic Pattern on 610 Bridge

To understand the nature of the trips on the TH 610 bridge, origin-destination with middle filter project was used with middle filter on US 10 and Coon Rapid Boulevard. Detailed investigation of trips crossing TH 610 bridge showed that high percentage of trips using coon rapids boulevard than US 10. The possible cause for this can be traffic diversion from US 10 to Coon rapids boulevard. Hourly analysis of the trips was done to understand the variation of trips crossing the 610-bridge using each facility.

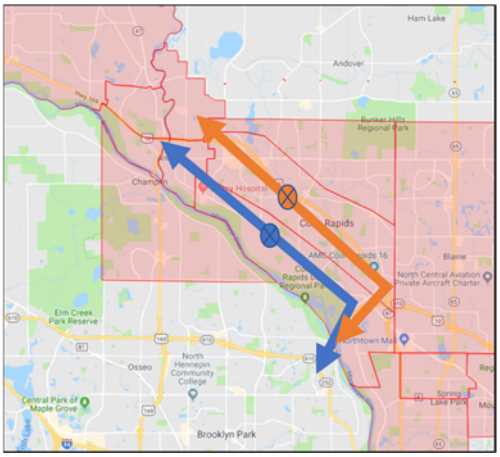

Figure 6: TH 610 river crossing travel pattern on US 10 & Coon Rapids Boulevard

Hourly analysis of the trips revealed that trips on the Coon rapids boulevard increases from early AM hours and reaches peak around 9:00 am and start to decline and start to pick up again around 2:00 pm and increases till 5:00 pm on the other hand percentage of trips using US 10 to cross the bridge remains nearly constant throughout. Slight increase in the trip's percentage from 8:00 am in the morning which continues till 12:00 pm and slight increase is seen again around 3:00 pm. Possible cause for the traffic diversion on coon rapid boulevard can be that US 10 is at capacity during the peak period due to which trips divert from the freeway to local road to get on 610 to cross river bridge. Data also reveals that of the trips on US 10 and Coon Rapid Boulevard crossing the TH 610 bridge, two third of them passes through TH 252.

Figure 7: River Crossing Trips on the TH 610 Bridge

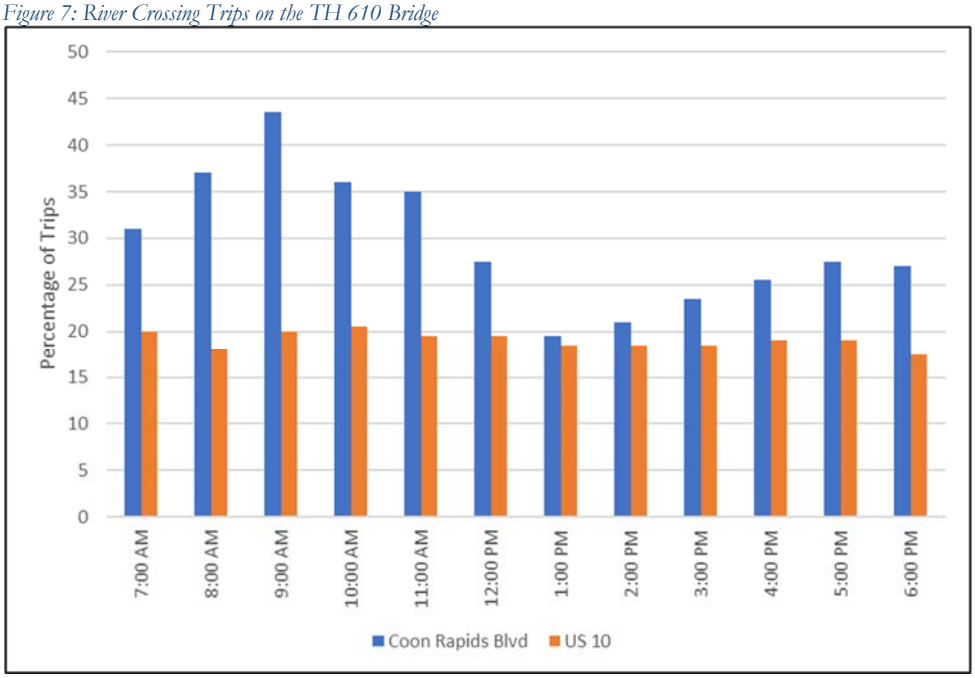

Traffic Diversion on Local Roadway System: Round Lake Boulevard and Hanson Boulevard

Initial screening of trips from origin and destination data reveals significant percentage of trips where going Andover using Hanson Boulevard and Round Lake Boulevard. 2018 MnDOT Metro Freeway Congestion report shows congestion just before Hanson Boulevard on US 10. To investigate that origin and destination with middle filter analysis was used with middle filters on Round Lake Boulevard and Hanson Boulevard to capture the trips diverting from US 10 to these two road way facilities for travelling to Andover. StreetLight data shows the higher percentage of traffic on Round Lake Boulevard than Hanson Boulevard between 8:00 and 9:00 am, which decreases further as we moved in day, on the other hand traffic on Hanson Boulevard start to surge around 9:30 am and continues until 12:00 pm, declines after that, and starts to pick up again around 2:00. The shift of trips can be seen from Round Lake Boulevard to Hanson Boulevard over the course of the day. Round Lake Boulevard and Hanson Boulevard roadway facilities are similar in terms of the capacity, so they should similar traffic patterns as well, likely reason behind the inconsistent trip percentage is congestion on US 10 between Round Lake Boulevard and Hanson Boulevard, which forces the trips to take off at Hanson Boulevard to travel not to Andover rather than using Round Lake Boulevard.

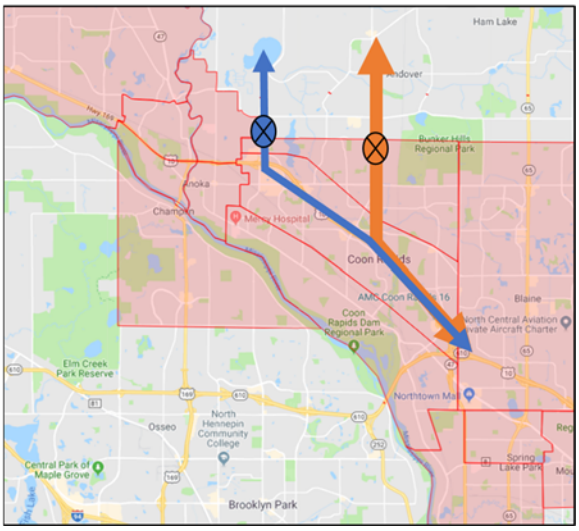

Figure 8: Trips using Round Lake Boulevard and Hanson Boulevard to/from Andover

Figure 9: Trip variation on Round Lake Boulevard and Hanson Boulevard to/from Andover

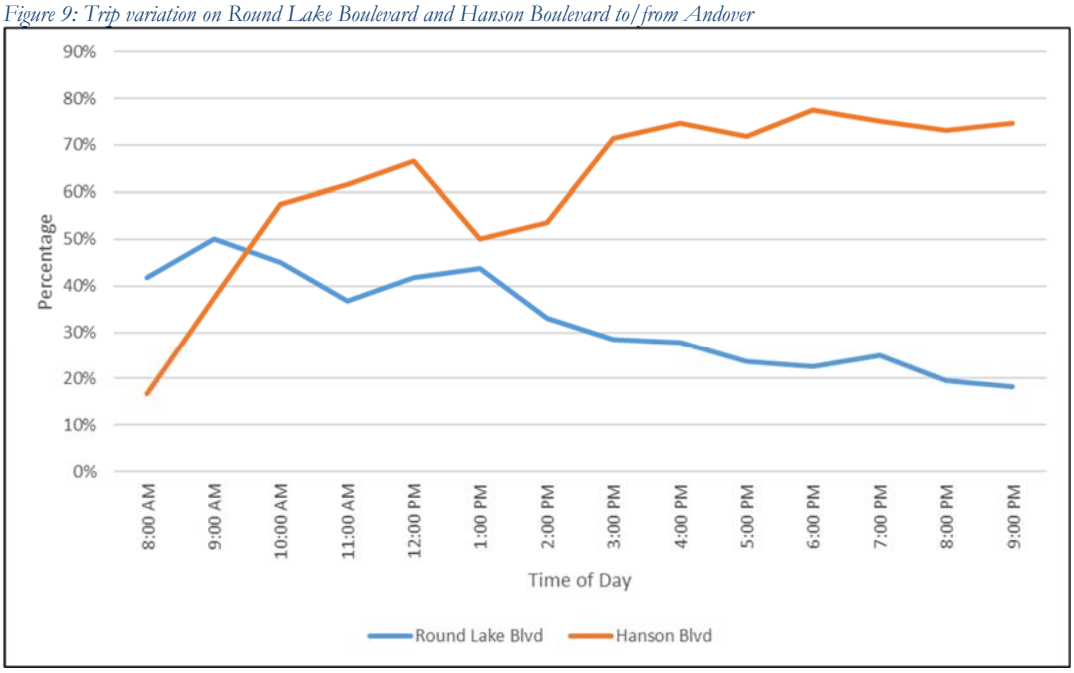

StreetLight Travel Pattern: Summary

The StreetLight Analysis reveals that US 10 has a diverse travel pattern with majority of regional travel during peak hours. Travel patterns on parallel routes showed that Coon Rapids Boulevard has a diverse travel pattern as well, with surge of regional trips in peak periods which are primarily using the TH 610 river bridge and are diverted from US 10 as it is reaches capacity. Congestion can also be seen to build throughout the day between Round Lake Boulevard and Hanson Boulevard as traffic diverts from Round Lake Boulevard to Hanson Boulevard to get to Andover.

Year 2040 Traffic Forecasts

Future year travel demand has been evaluated using the Anoka County Travel Demand Model. Existing travel demand was reviewed, and forecasts were developed for year 2040 No Build and Build conditions. The build scenario analysis included four scenarios. This section presents assumptions and methods used to develop these forecasts and results.

Travel demand models provide an estimation of traffic forecasts that include many future year assumptions. However, with uncertainty regarding future-year conditions, the model results should be considered estimates with some margin of error. MnDOT currently considers long-range forecasts to have a precision of +/- 15 percent. Decision-makers and designers should be aware of the uncertainty in long-range forecasts and whether that margin of error would affect outcomes or the recommended improvements.

Assumptions

Existing and year 2040 socioeconomic and roadway system assumptions consistent with the regional development assumptions (Thrive MSP 2040) and regional transportation policy plan are incorporated into the model as described below.

Transportation Network

Baseline roadway system forecasts assume both the existing as well as the planned and programmed roadway system. For modeling at this level, the improvements would assume changes that affect roadway capacity and performance, such as new roadways, changes in the number of lanes or speed, or the addition/removal of channelization on a segment.

Highway and transit assumptions were incorporated to be consistent with the following documents:

- Metropolitan Council 2040 Transportation Policy Plan Current Revenue Scenario
- MnDOT Statewide Transportation Improvement Plan (STIP)

The following regionally significant transportation network improvement projects were identified as meeting the above conditions:

- I-35W North MnPASS
- TH 252 Freeway Conversion
- I-94 between downtown Minneapolis and downtown Saint Paul

Zonal Data and Socioeconomic Update

The Transportation Analysis Zone (TAZ) structure of the Metropolitan Council's Activity Based Model (ABM) was used in the travel demand analysis. Development inputs to the model (population, households and employment) are consistent with the Thrive MSP 2040 plan. Existing and future year municipal socioeconomic totals are depicted in Table 2.

Table 2: Existing and Year 2040 Municipal Totals

	Population		Households		Total Employment	
	2014	2040	2014	2040	2014	2040
Anoka	17,586	21,200	7,252	8,900	13,926	14,399
Blaine	62,066	87,304	22,647	33,304	23,099	31,002
Champlin	22,880	24,001	8,426	9,602	4,027	4,800
Coon Rapids	61,476	72,100	23,532	29,300	23,260	30,900
Fridley	27,952	32,502	11,426	13,599	22,583	26,099
Mounds View	12,444	12,400	4,949	5,198	5,952	7,199
Ramsey	24,811	34,701	8,500	12,999	5,799	8,101
Spring Lake Park	6,513	7,401	2,698	3,199	2,895	3,601

*Based on amendment to Thrive MSP 2040 employment forecast

Year 2040 Forecast Scenarios

The following sections describe each build scenario and accompanying assumptions. Build scenarios include an additional lane between Hanson Blvd and Round Lake Blvd "Full Build", an additional lane between Hanson Blvd and Main Street "Partial Build", an auxiliary lane between Hanson Blvd and Round Lake Blvd "Full Auxiliary", and an auxiliary lane between Hanson Blvd and Main Street "Partial Auxiliary". Year 2040 scenario descriptions are shown in Table 3.

Table 3: Year 2040 Scenario Assumptions

Year 2040 Scenario	Geometric Assumptions
Full Build	Additional travel lane in each direction between Hanson Boulevard and Round Lake Boulevard.
Partial Build	Additional travel lane in each direction between Hanson Boulevard and Main Street
Full Auxiliary	Auxiliary lane in each direction between Hanson Boulevard and Main Street, and between Main Street and Round Lake Boulevard
Partial Auxiliary	Auxiliary lane in each direction between Hanson Boulevard and Main Street
Dynamic Shoulder	Improved shoulders that can be used as a third travel lane in the peak direction of travel (AM eastbound, PM westbound) between Hanson Boulevard and Round Lake Boulevard

Existing and year 2040 daily traffic volumes at key locations are shown in Appendix A. Year 2040 balanced mainline volumes for all mainline and ramps are included in Appendix B. The forecasts reflect the anticipated behavior, development growth, and network improvements. Year 2040 No Build reasonableness check tables are included in Appendix C.

Forecast Results

The forecasts prepared for the year 2040 forecast scenarios show growth in travel demand is expected along the US 10 corridor. Under the No Build scenario, US 10 would increase by approximately 11,000 vehicles per day (vpd) between Hanson Boulevard and Main Street. Traffic growth is also expected on local roadways in the study area, with increases of 2,500 to 5,000 vpd on Coon Rapids Boulevard, 6,000 vpd on Hanson Boulevard, and 6,500 vpd on Round Lake Boulevard. Traffic volume changes are shown in Figure 10.

Figure 10: Traffic volume changes from existing conditions to 2040 no build conditions

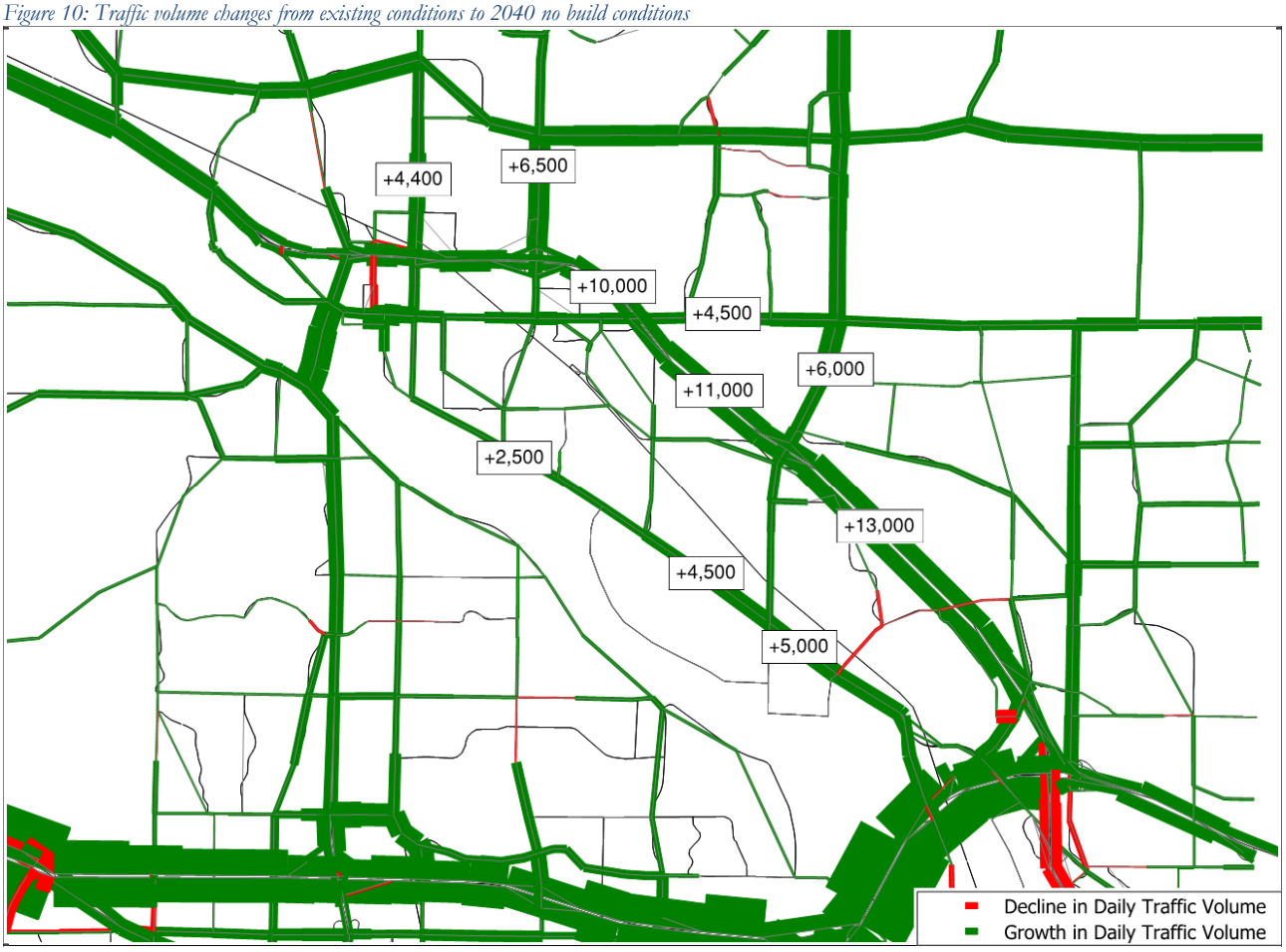

The Full Build scenario introduced additional capacity along US 10 between Hanson Boulevard and Round Lake Boulevard. This is expected to result in an additional increase of 6,000 to 8,000 vpd on

US 10 between Hanson Boulevard and Round Lake Boulevard. There are also local roadway impacts under this scenario, with a decrease of 1,400 vpd on Coon Rapids Boulevard as traffic shifts back to US 10. There is also a shift from Hanson Boulevard to Round Lake Boulevard, as fewer vehicles divert from US 10 when congestion is present between Hanson Boulevard to Round Lake Boulevard and under the No Build scenario.

The remaining build scenarios show similar patterns to the build scenario with lesser magnitude. Forecast volumes can be found in Appendix A. A separate figure with daily volumes for the dynamic shoulder scenario has not been provided as its impacts are significant at the peak period level as opposed to the daily level. Peak period volumes for the dynamic should scenario align with those of the full build scenario in the peak direction of travel (eastbound in the AM Peak and westbound in the PM peak) and the no build scenario in the off-peak direction of travel (westbound in the AM Peak and eastbound in the PM peak).

To better understand how additional capacity will impact traffic in peak periods, Figure 11 shows westbound traffic projected in the PM peak for the three primary scenarios. Existing conditions show the Hanson Boulevard to Main Street segment of US 10 as at capacity. This condition worsens in 2040, with a volume to capacity ratio of 1.08. However, with the addition of a lane in the full build scenario, capacity needs are met and exceeded resulting in a volume to capacity ratio of 0.77. The additional capacity from Hanson Boulevard to Round Lake Boulevard leads to additional volume farther west in the corridor, but the volume to capacity ratio on those segments remains less than 1.0.

Figure 11: Schematic of PM peak westbound traffic volumes and volume to capacity ratios. Segments are color-coded based on their volume to capacity ratio.

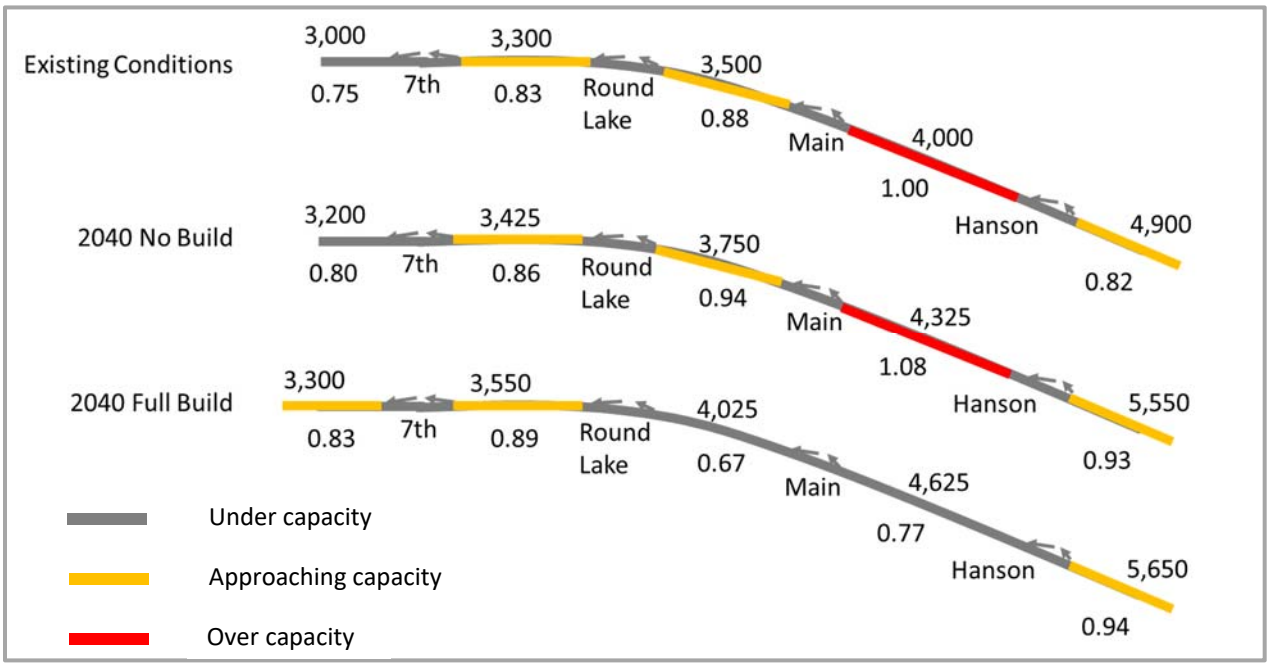

Construction Impact Scenarios

Upcoming major construction projects have been identified for their potential to impact traffic volumes on TH 10. Specifically, TH 252 Freeway Conversion, TH 169 Freeway Conversion in Elk River, I-94 Add a Lane, I-35W MnPASS, and TH 10 at Thurston Interchange Project have been analyzed. All scenarios have incorporated existing traffic volumes. Model results show minimal impacts on the TH 10 study area for all scenarios.

TH 252 Freeway Conversion

Geometric Assumptions:

- Full closure of TH 252

Analysis of this "worst-case" scenario has minimal effect on TH 10 traffic volumes leading to the inference that other closure scenarios would have lesser impacts that would occur farther away from US 10 in Anoka. The change in traffic volumes associated with the TH 252 construction scenario is shown in Figure 12.

Figure 12: Change in Traffic Volumes Associated with TH 252 Construction

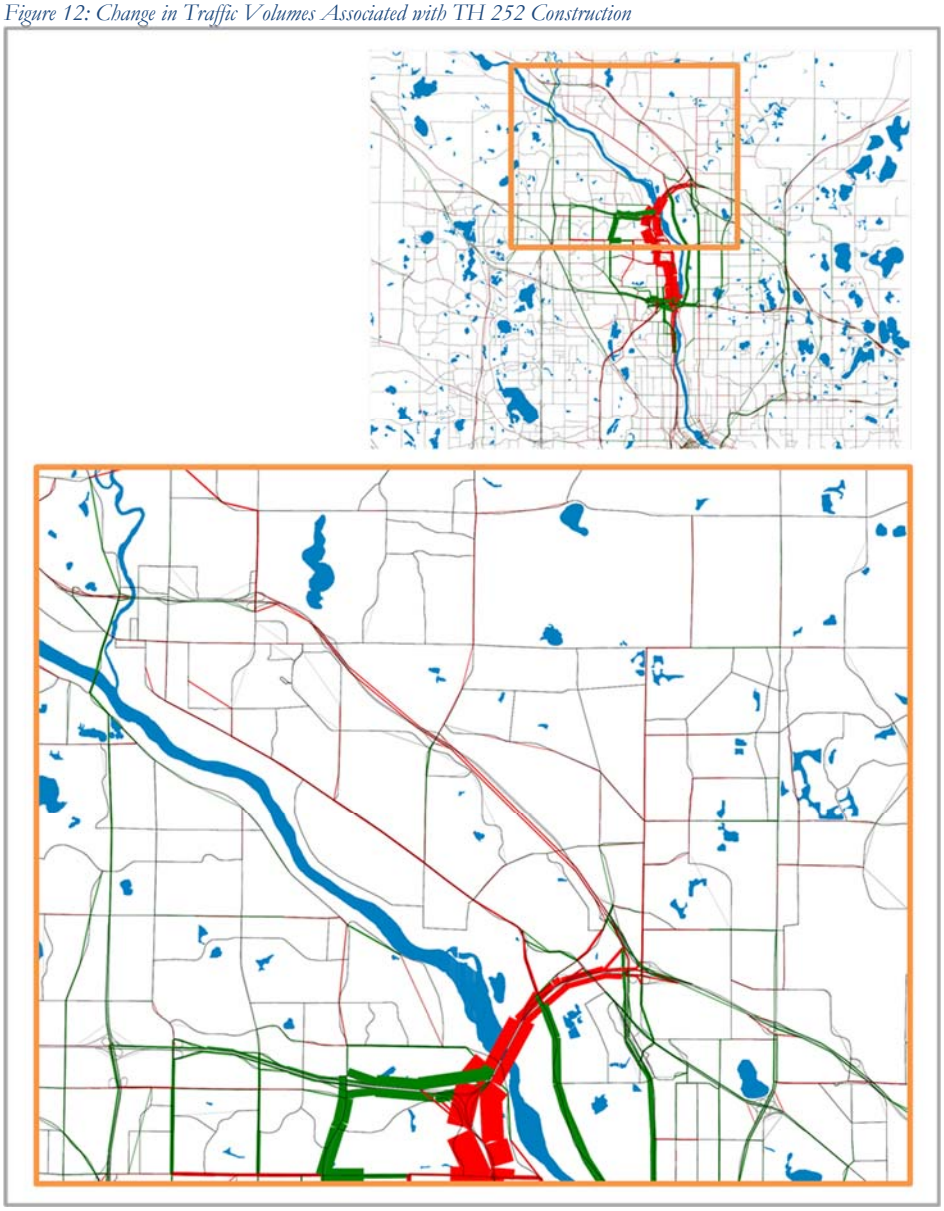

TH 169 Freeway Conversion Elk River

Geometric Assumptions:

- Capacity reductions of 15% and 50% tested
- Capacity reduced on TH 10 on either side of the TH 10/TH 169 interchange and on TH 169 from the south side of TH 10 to 205th Avenue

Traffic volume impacts primarily occur in Elk River and dissipate quickly to the east. Traffic volumes modeled to change less than 1,000 vehicles per day in Anoka on TH 10 and is shown in Figure 13.

Figure 13: Change in Traffic Volumes Associated with TH 169 in Elk River Construction

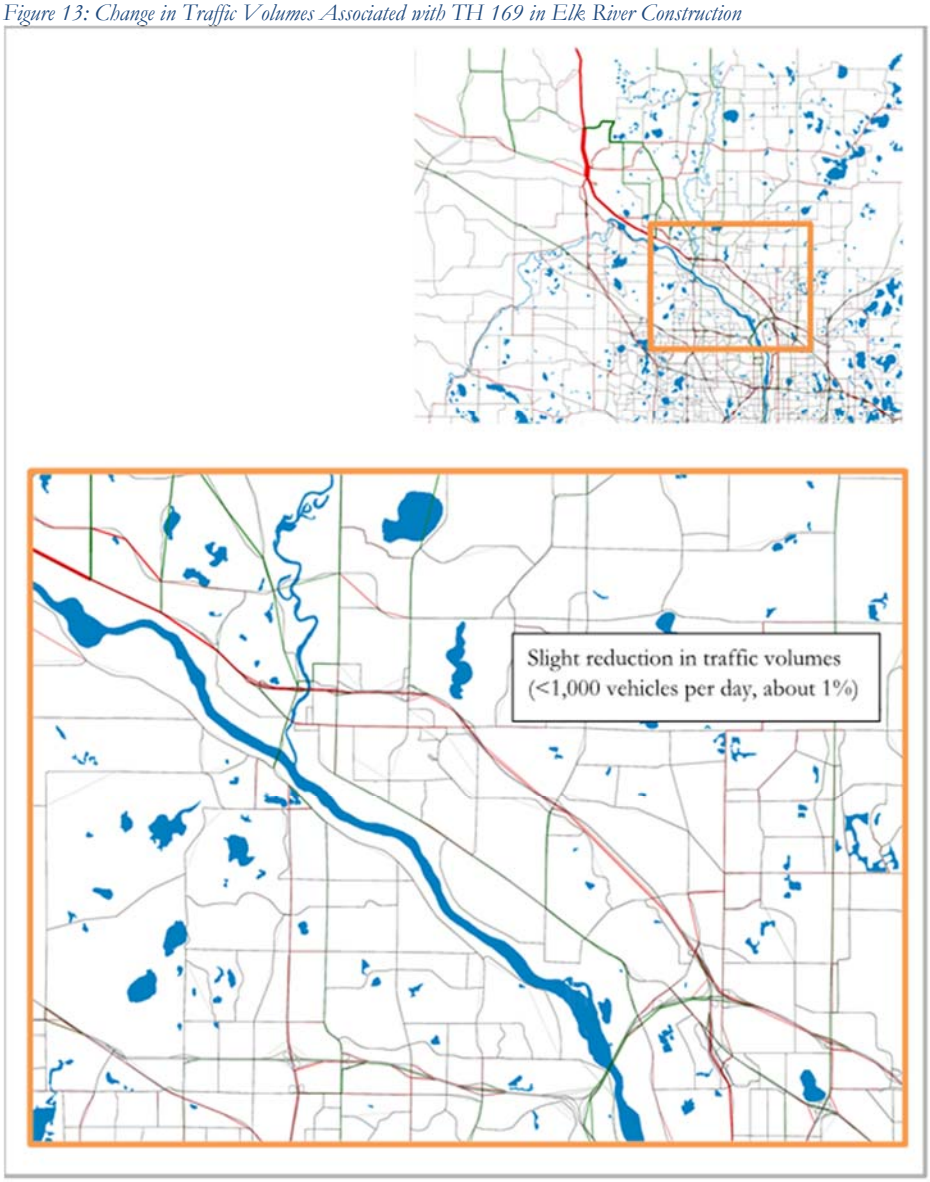

I-94 Add a Lane and I-35W MnPASS

Geometric Assumptions:

- Projects will occur simultaneously
- Lane reduction from 6 lanes to 4 lanes on I-94 from the I-494/I-694 interchange to 141st Ave N
- Lane reduction from 6 lanes to 4 lanes on I-35W from TH 36 to TH 10

As with prior scenarios, minimal impacts shown in model results on TH 10 even under "worst case" conditions. The traffic volume shift under this construction scenario is shown in Figure 14.

Figure 14: Change in Traffic Volumes Associated with I-35W and I-94 Construction

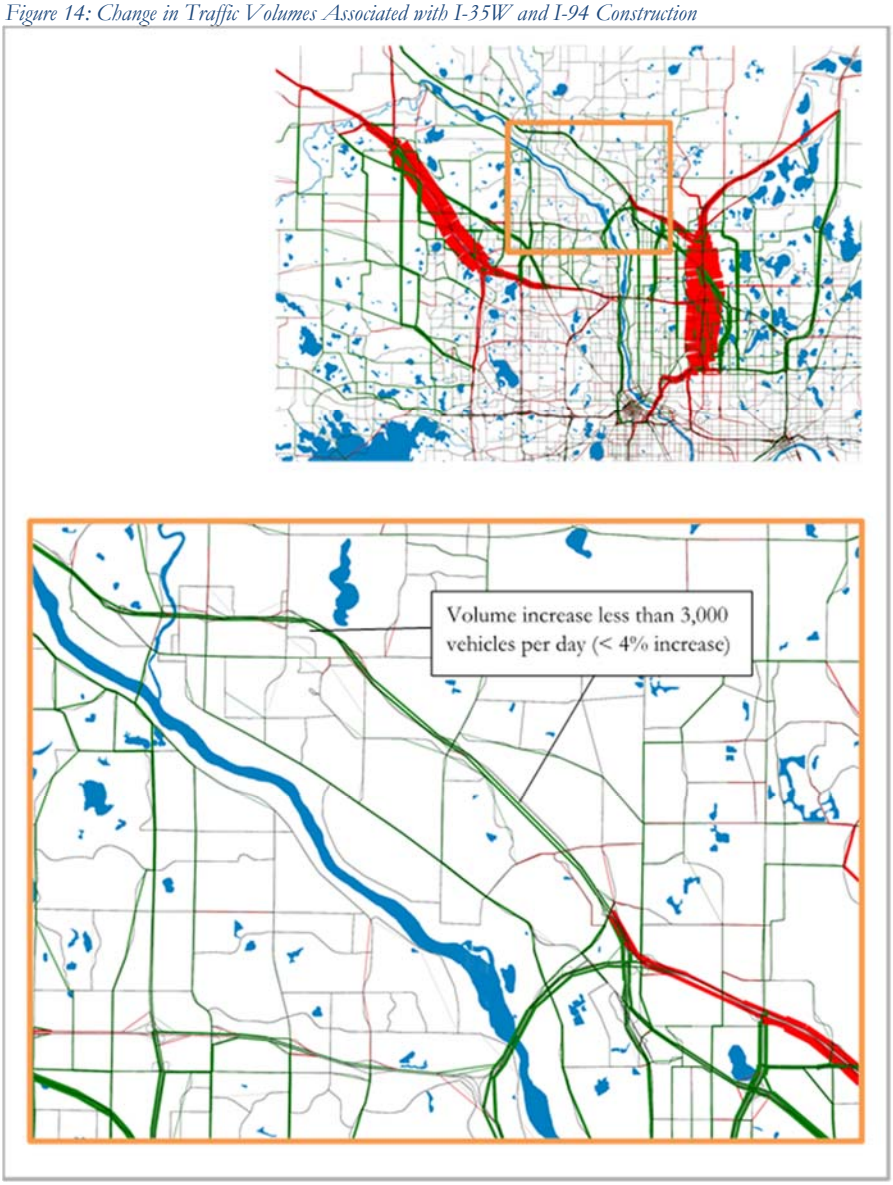

US 10 Rum River Bridge and Grade Separations

Geometric Assumptions:

- Capacity reduction of 15% and 50% tested
- Capacity reduced between North 7th Avenue and Ramsey Boulevard NW
- Lanes reduced from 2 to 1 in each direction
- Access between Thurston Avenue NW and TH 10 closed
- Thurston Avenue NW over TH 10 closed

The model results show this project to have the most significant impact on the TH 10 study area, however much of this impact dissipates on TH 10 west of Main Street. Different capacity reductions yield similar patterns with different levels of traffic volume change; this is shown in Figure 15.

Figure 15: Change in Traffic Volumes Associated with TH 10 Construction

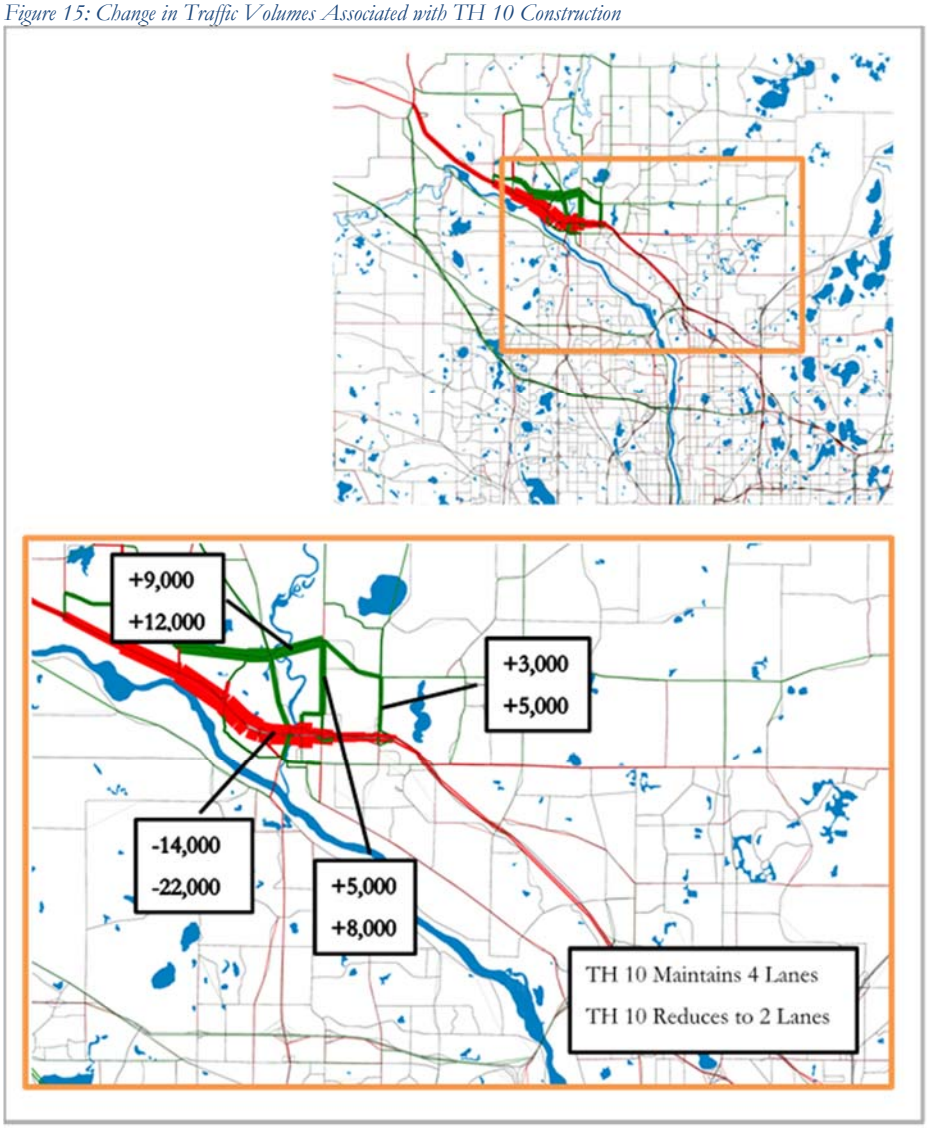

Appendix A: Daily Traffic Volume Maps

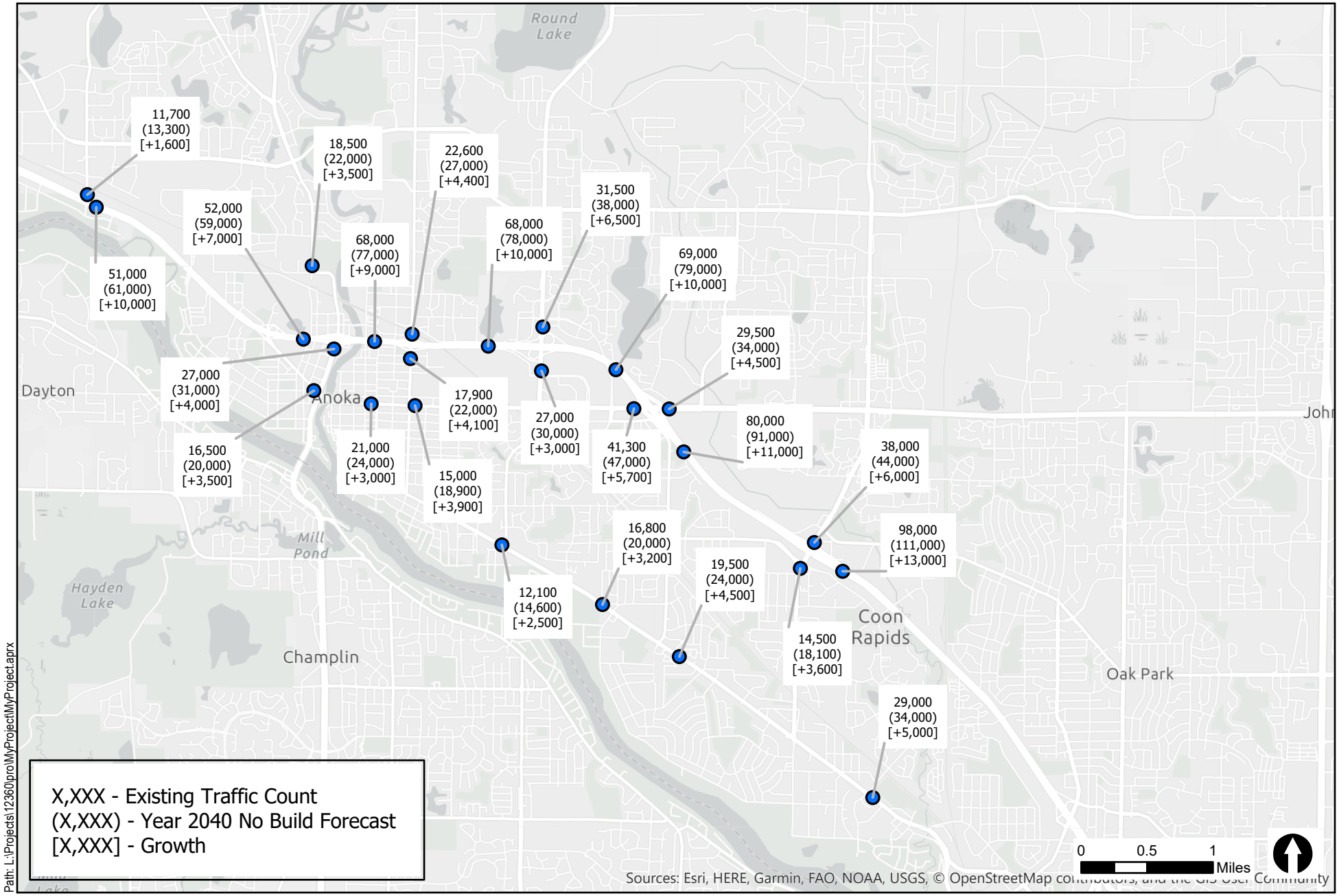

2040 No Build Forecast

US 10 Add-a-Lane from CSAH 78 to CSAH 9

Anoka County

Figure A-1

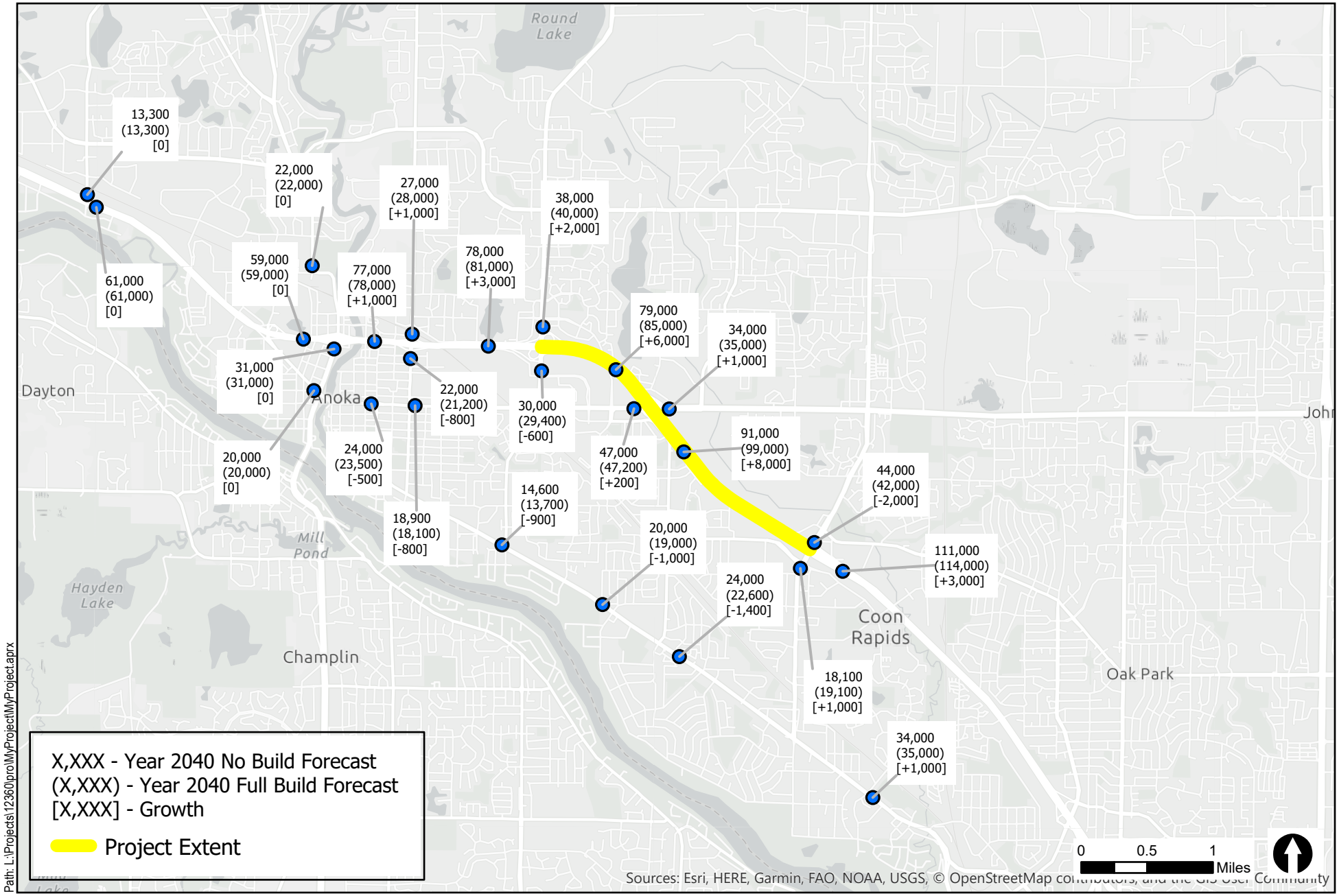

2040 Full Build Forecast

US 10 Add-a-Lane from CSAH 78 to CSAH 9

Anoka County

Figure A-2

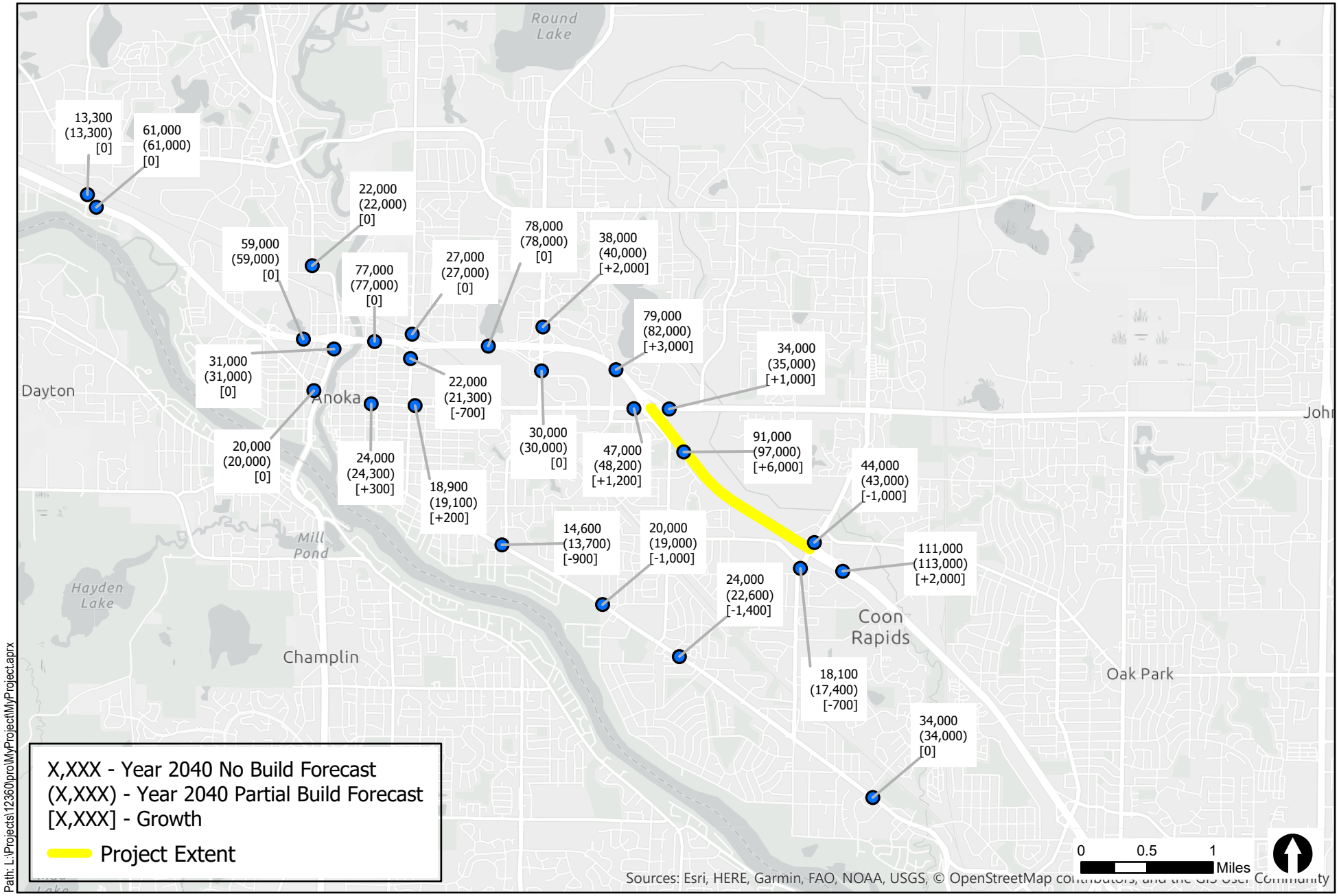

2040 Partial Build Forecast

US 10 Add-a-Lane from CSAH 78 to CSAH 9

Anoka County

Figure A-3

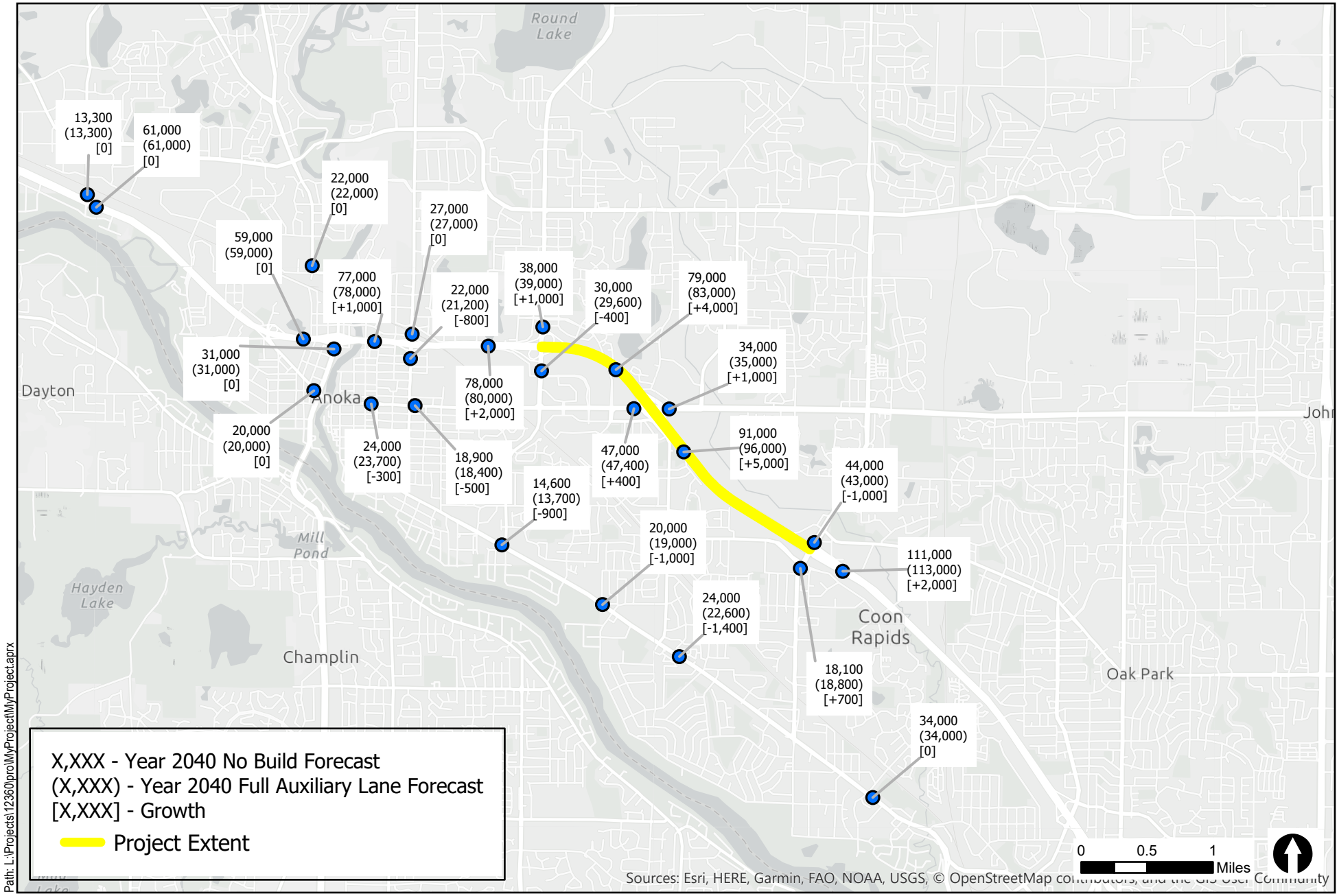

2040 Full Auxiliary Lane Forecast

US 10 Add-a-Lane from CSAH 78 to CSAH 9

Anoka County

Figure A-4

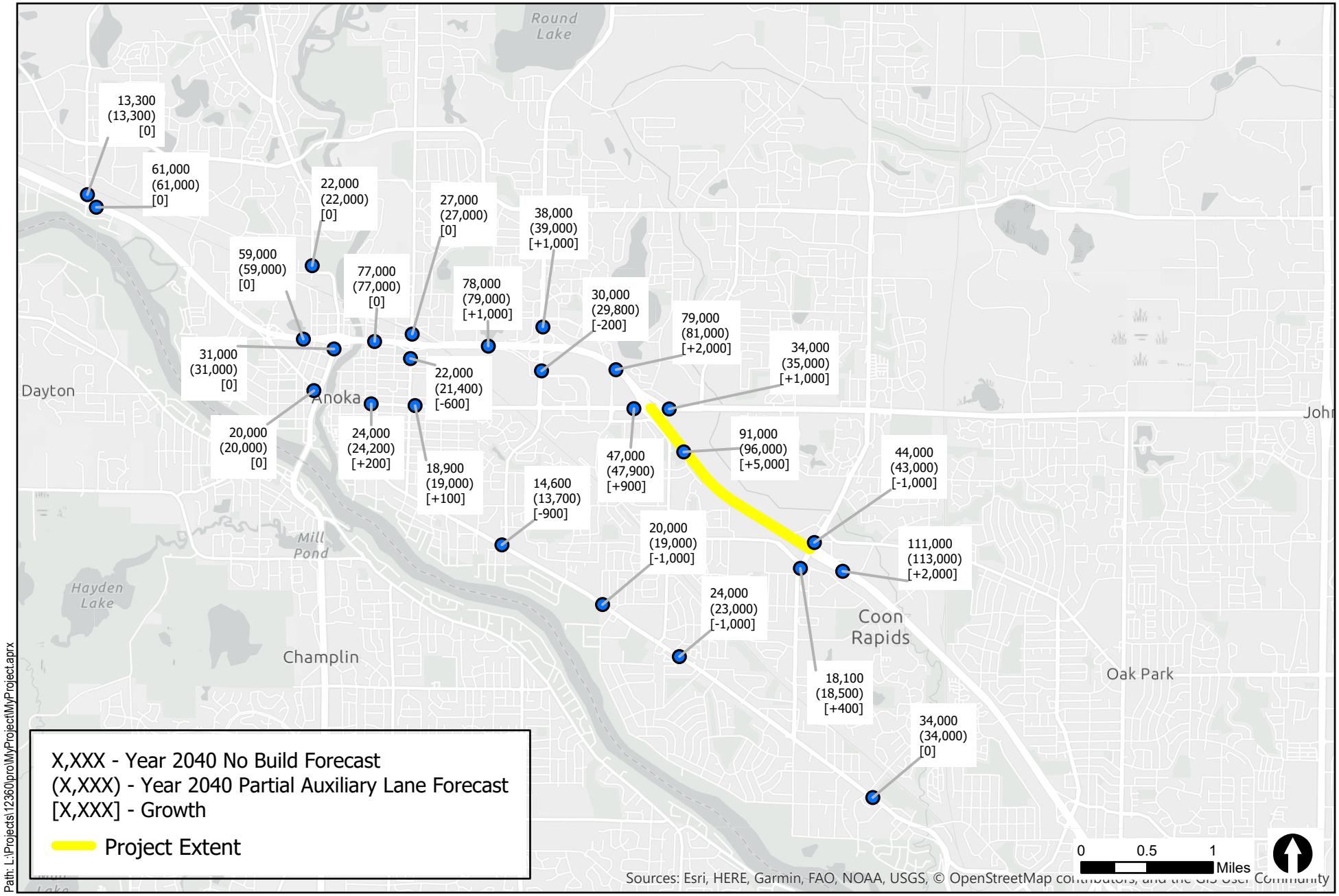

2040 Partial Auxiliary Lane Forecast

US 10 Add-a-Lane from CSAH 78 to CSAH 9

Anoka County

Figure A-5

Appendix B: Peak Hour Freeway Volume Tables

Table B-1

Peak Hour Freeway Volumes- **Existing and 2040 No Build Conditions**

	Existing Conditions					Year 2040 No Build Conditions										
Description	**Daily Weekday**	**AM Peak Hour**	**PM Peak Hour**	**Existing AM %**	**Exising PM %**	**Daily Weekday**	**Daily Weekday Delta**	**AM % Adj**	**AM %**	**PM % Adj**	**PM %**	**AM Peak Hour**	**PM Peak Hour**	**Daily**	**AM**	**PM**
EB US 10 Mainline	29,500	2,375	2,050	8.1%	6.9%	33,400	3,900	-0.5%	7.6%	-0.5%	6.4%	2,525	2,150	1.13	1.06	1.05
US 169/MN 47 Off Ramp	1,200	75	75	6.3%	6.3%	800	-400	-0.5%	5.8%	-0.5%	5.8%	50	50	0.67	0.67	0.67
EB US 10 Mainline	28,300	2,325	2,000	8.2%	7.1%	32,600	4,300	-	7.6%	-	6.4%	2,475	2,100	1.15	1.06	1.05
US 169/MN 47 On Ramp	12,100	650	1,000	5.4%	8.3%	13,300	1,200	-0.5%	4.9%	-0.5%	7.8%	650	1,025	1.10	1.00	1.03
EB US 10 Mainline	40,400	2,975	2,650	7.4%	6.6%	45,900	5,500	-	6.8%	-	6.8%	3,125	3,125	1.14	1.05	1.18
7th Ave Off Ramp	4,600	375	350	8.2%	7.6%	5,200	550	-0.5%	7.7%	-0.5%	7.1%	400	375	1.13	1.07	1.07
EB US 10 Mainline	34,600	2,550	2,500	7.4%	7.2%	39,600	4,950	-	6.9%	-	6.9%	2,725	2,750	1.14	1.07	1.10
7th Ave On Ramp	7,700	625	625	8.1%	8.1%	8,700	950	-0.5%	7.6%	-0.5%	7.6%	675	675	1.13	1.08	1.08
EB US 10 Mainline	43,600	3,225	3,275	7.4%	7.5%	49,500	5,900	-	6.9%	-	6.9%	3,400	3,425	1.14	1.05	1.05
Round Lk Blvd Off Ramp	9,100	275	750	3.0%	8.2%	10,400	1,300	-0.5%	2.5%	-0.5%	7.7%	250	800	1.14	0.91	1.07
EB US 10 Mainline	34,400	2,950	2,525	8.6%	7.3%	35,700	1,300	-	8.8%	-	7.4%	3,150	2,625	1.04	1.07	1.04
Round Lk Blvd On Ramp	8,600	850	525	9.9%	6.1%	8,600	0	-0.5%	9.4%	-0.5%	5.6%	800	475	1.00	0.94	0.90
EB TH 10 Mainline/ E of Round Lk	43,000	3,825	3,000	8.9%	7.0%	48,900	5,900	-	8.1%	-	6.3%	3,950	3,100	1.14	1.03	1.03
Main Street Off Ramp	6,800	250	625	3.7%	9.2%	7,400	590	-0.5%	3.2%	-0.5%	8.7%	225	650	1.09	0.90	1.04
EB US 10 Mainline	36,300	3,575	2,400	9.8%	6.6%	41,600	5,310	-	9.0%	-	5.9%	3,725	2,450	1.15	1.04	1.02
Main Street On Ramp	10,500	725	675	6.9%	6.4%	11,400	890	-0.5%	6.4%	-0.5%	5.9%	725	675	1.09	1.00	1.00
EB US 10 Mainline	47,000	4,325	3,075	9.2%	6.5%	53,200	6,200	-	8.4%	-	5.9%	4,450	3,125	1.13	1.03	1.02
Hanson Blvd Off Ramp	6,700	300	575	4.5%	8.6%	7,000	250	-0.5%	4.0%	-0.5%	8.1%	275	575	1.04	0.92	1.00
EB US 10 Mainline	40,200	4,025	2,500	10.0%	6.2%	46,200	5,950	-	9.0%	-	5.5%	4,175	2,550	1.15	1.04	1.02
Hanson Blvd On Ramp	17,500	2,000	1,025	11.4%	5.9%	19,400	1,900	-0.5%	10.9%	-0.5%	5.4%	2,125	1,050	1.11	1.06	1.02
EB US 10 Mainline	59,100	6,100	3,550	10.3%	6.0%	67,500	8,350	-	9.3%	-	5.3%	6,300	3,600	1.14	1.03	1.01
WB US 10 Mainline	49,700	2,225	4,850	4.5%	9.8%	57,000	7,300	-0.5%	4.0%	0.0%	9.8%	2,275	5,550	1.15	1.02	1.14
Hanson Blvd NW Off Ramp	16,700	675	1,575	4.0%	9.4%	18,200	1,500	-0.5%	3.5%	-0.5%	8.9%	650	1,625	1.09	0.96	1.03
WB US 10 Mainline	37,400	1,750	3,600	4.7%	9.6%	43,200	5,800	-	3.8%	-	9.1%	1,625	3,925	1.16	0.93	1.09
Hanson Blvd NW On Ramp	5,400	350	375	6.5%	6.9%	5,900	460	-0.5%	6.0%	0.0%	6.9%	350	400	1.09	1.00	1.07
WB US 10 Mainline	43,100	2,100	3,975	4.9%	9.2%	49,400	6,260	-	4.0%	-	8.8%	1,975	4,325	1.15	0.94	1.09
Main Street NW Off Ramp	9,700	325	900	3.4%	9.3%	10,800	1,050	-0.5%	2.9%	-0.5%	8.8%	300	950	1.11	0.92	1.06
WB US 10 Mainline	33,400	1,775	3,100	5.3%	9.3%	38,600	5,210	-	4.3%	-	8.7%	1,675	3,375	1.16	0.94	1.09
Main Street Northwest On Ramp	6,400	525	375	8.2%	5.9%	6,800	350	-0.5%	7.7%	-0.5%	5.4%	525	375	1.06	1.00	1.00
WB US 10 Mainline	39,900	2,325	3,475	5.8%	8.7%	45,500	5,570	-	4.8%	-	8.2%	2,200	3,750	1.14	0.95	1.08
Round LK Blvd Northwest Off Ramp	8,500	275	825	3.2%	9.7%	10,100	1,600	-0.5%	2.7%	-0.5%	9.2%	275	925	1.19	1.00	1.12
WB US 10 Mainline	31,400	2,050	2,700	6.5%	8.6%	35,400	3,970	-	5.4%	-	8.0%	1,925	2,825	1.13	0.94	1.05
Round LK Blvd Northwest On Ramp	9,700	650	575	6.7%	5.9%	11,200	1,500	-0.5%	6.2%	-0.5%	5.4%	700	600	1.15	1.08	1.04
WB US 10 Mainline	41,100	2,650	3,250	6.4%	7.9%	46,600	5,470	-	5.6%	-	7.3%	2,625	3,425	1.13	0.99	1.05
7th Ave Off Ramp	7,200	475	625	6.6%	8.7%	7,500	260	-0.5%	6.1%	-0.5%	8.2%	450	625	1.04	0.95	1.00
WB US 10 Mainline	33,300	2,150	2,600	6.5%	7.8%	38,500	5,210	-	5.6%	-	7.3%	2,175	2,800	1.16	1.01	1.08
7th Ave On Ramp	4,500	400	350	8.9%	7.8%	5,500	970	-0.5%	8.4%	-0.5%	7.3%	450	400	1.22	1.13	1.14
WB US 10 Mainline	38,300	2,600	3,000	6.8%	7.8%	44,500	6,180	-	5.9%	-	7.2%	2,625	3,200	1.16	1.01	1.07
N Ferry Street Off Ramp	11,000	775	725	7.0%	6.6%	12,600	1,600	-0.5%	6.5%	-0.5%	6.1%	825	775	1.15	1.06	1.07
WB US 10 Mainline	27,100	1,725	2,250	6.4%	8.3%	31,700	4,580	-	5.7%	-	7.6%	1,800	2,425	1.17	1.04	1.08
N Ferry Street On ramp	3,700	200	175	5.4%	4.7%	3,400	-350	-0.5%	4.9%	-0.5%	4.2%	175	150	0.92	0.88	0.86
WB US 10 Mainline	30,800	1,925	2,425	6.3%	7.9%	35,000	4,230	-	5.6%	-	7.4%	1,975	2,575	1.14	1.03	1.06

Table B-2

Peak Hour Freeway Volumes- **2040 Full Build and Partial Build Conditions**

	Year 2040 Full Build Conditions											Year 2040 Partial Build Conditions										
Description	Daily Weekday	Daily Weekday Delta	AM % Adj	AM %	PM % Adj	PM %	AM Peak Hour	PM Peak Hour	Daily	AM	PM	Daily Weekday	Daily Weekday Delta	AM % Adj	AM %	PM % Adj	PM %	AM Peak Hour	PM Peak Hour	Daily	AM	PM
EB US 10 Mainline	33,900	475	-0.5%	7.6%	0.0%	6.9%	2,550	2,350	1.01	1.01	1.09	33,700	250	0.0%	8.1%	0.0%	6.9%	2,725	2,350	1.01	1.08	1.09
US 169/MN 47 Off Ramp	800	0	-0.5%	5.8%	-0.5%	5.8%	50	50	1.00	1.00	1.00	800	0	-0.5%	5.8%	-0.5%	5.8%	50	50	1.00	1.00	1.00
EB US 10 Mainline	33,100	475	-	7.6%	-	6.9%	2,500	2,300	1.02	1.01	1.10	32,900	250	-	8.1%	-	7.0%	2,675	2,300	1.01	1.08	1.10
US 169/MN 47 On Ramp	13,700	375	-0.5%	4.9%	-0.5%	7.8%	675	1,075	1.03	1.04	1.05	13,700	375	-0.5%	4.9%	-0.5%	7.8%	675	1,075	1.03	1.04	1.05
EB US 10 Mainline	46,800	850	-	6.8%	-	7.2%	3,175	3,375	1.02	1.02	1.08	46,500	625	-	7.2%	-	7.3%	3,350	3,375	1.01	1.07	1.08
7th Ave Off Ramp	5,100	-125	-0.5%	7.7%	-0.5%	7.1%	400	375	0.98	1.00	1.00	5,400	200	-0.5%	7.7%	-0.5%	7.1%	425	375	1.04	1.06	1.00
EB US 10 Mainline	40,600	975	-	6.8%	-	7.4%	2,775	3,000	1.03	1.02	1.09	40,000	425	-	7.3%	-	7.5%	2,925	3,000	1.01	1.07	1.09
7th Ave On Ramp	9,200	500	-0.5%	7.6%	-0.5%	7.6%	700	700	1.06	1.04	1.04	8,400	-300	-0.5%	7.6%	-0.5%	7.6%	650	650	0.97	0.96	0.96
EB US 10 Mainline	51,000	1,475	-	6.8%	-	7.3%	3,475	3,700	1.03	1.02	1.08	49,600	125	-	7.2%	-	7.4%	3,575	3,650	1.00	1.05	1.07
Round Lk Blvd Off Ramp	10,200	-225	-0.5%	2.5%	-0.5%	7.7%	250	800	0.98	1.00	1.00	10,300	-100	-0.5%	2.5%	-0.5%	7.7%	250	800	0.99	1.00	1.00
EB US 10 Mainline	37,400	1,700	-	8.6%	-	7.8%	3,225	2,900	1.05	1.02	1.10	35,900	225	-	9.3%	-	7.9%	3,325	2,850	1.01	1.06	1.09
Round Lk Blvd On Ramp	10,000	1,350	-0.5%	9.4%	-0.5%	5.6%	950	550	1.16	1.19	1.16	9,500	875	-0.5%	9.4%	-0.5%	5.6%	900	525	1.10	1.13	1.11
EB TH 10 Mainline/ E of Round Lk	52,000	3,050	-	8.0%	-	6.6%	4,175	3,450	1.06	1.06	1.11	50,000	1,100	-	8.5%	-	6.8%	4,225	3,375	1.02	1.07	1.09
Main Street Off Ramp	7,800	400	-0.5%	3.2%	-0.5%	8.7%	250	675	1.05	1.11	1.04	7,200	-250	-0.5%	3.2%	-0.5%	8.7%	225	625	0.97	1.00	0.96
EB US 10 Mainline	44,300	2,650	-	8.9%	-	6.3%	3,925	2,775	1.06	1.05	1.13	43,000	1,350	-	9.3%	-	6.4%	4,000	2,750	1.03	1.07	1.12
Main Street On Ramp	12,200	750	-0.5%	6.4%	-0.5%	5.9%	775	725	1.07	1.07	1.07	13,000	1,625	-0.5%	6.4%	-0.5%	5.9%	825	775	1.14	1.14	1.15
EB US 10 Mainline	56,600	3,400	-	8.3%	-	6.2%	4,700	3,500	1.06	1.06	1.12	56,200	2,975	-	8.6%	-	6.3%	4,825	3,525	1.06	1.08	1.13
Hanson Blvd Off Ramp	8,000	975	-0.5%	4.0%	-0.5%	8.1%	325	650	1.14	1.18	1.13	7,700	725	-0.5%	4.0%	-0.5%	8.1%	300	625	1.10	1.09	1.09
EB US 10 Mainline	48,600	2,425	-	9.0%	-	5.9%	4,375	2,850	1.05	1.05	1.12	48,500	2,250	-	9.3%	-	6.0%	4,525	2,900	1.05	1.08	1.14
Hanson Blvd On Ramp	17,300	-2,075	-0.5%	10.9%	-0.5%	5.4%	1,900	925	0.89	0.89	0.88	18,100	-1,275	-0.5%	10.9%	-0.5%	5.4%	1,975	975	0.93	0.93	0.93
EB US 10 Mainline	68,200	650	-	9.2%	-	5.5%	6,275	3,775	1.01	1.00	1.05	68,500	975	-	9.5%	-	5.7%	6,500	3,875	1.01	1.03	1.08
WB US 10 Mainline	58,000	950	0.0%	4.5%	0.0%	9.8%	2,600	5,650	1.02	1.14	1.02	58,300	1,300	0.0%	4.5%	0.0%	9.8%	2,600	5,700	1.02	1.14	1.03
Hanson Blvd NW Off Ramp	16,600	-1,600	-0.5%	3.5%	-0.5%	8.9%	600	1,475	0.91	0.92	0.91	16,800	-1,375	-0.5%	3.5%	-0.5%	8.9%	600	1,500	0.92	0.92	0.92
WB US 10 Mainline	46,000	2,750	-	4.3%	-	9.1%	2,000	4,175	1.06	1.23	1.06	45,900	2,675	-	4.4%	-	9.2%	2,000	4,200	1.06	1.23	1.07
Hanson Blvd NW On Ramp	6,800	850	-0.5%	6.0%	-0.5%	6.4%	400	450	1.15	1.14	1.13	6,500	575	-0.5%	6.0%	-0.5%	6.4%	400	425	1.10	1.14	1.06
WB US 10 Mainline	53,000	3,600	-	4.5%	-	8.7%	2,400	4,625	1.07	1.22	1.07	52,700	3,250	-	4.6%	-	8.8%	2,400	4,625	1.07	1.22	1.07
Main Street NW Off Ramp	10,700	-100	-0.5%	2.9%	-0.5%	8.8%	300	950	0.99	1.00	1.00	12,700	1,900	-0.5%	2.9%	-0.5%	8.8%	350	1,125	1.18	1.17	1.18
WB US 10 Mainline	42,300	3,700	-	5.0%	-	8.7%	2,100	3,675	1.10	1.25	1.09	40,000	1,350	-	5.1%	-	8.8%	2,050	3,500	1.04	1.22	1.04
Main Street Northwest On Ramp	6,400	-425	-0.5%	7.7%	-0.5%	5.4%	500	350	0.94	0.95	0.93	6,700	-75	-0.5%	7.7%	-0.5%	5.4%	525	350	0.99	1.00	0.93
WB US 10 Mainline	48,800	3,275	-	5.3%	-	8.2%	2,600	4,025	1.07	1.18	1.07	46,800	1,275	-	5.5%	-	8.2%	2,575	3,850	1.03	1.17	1.03
Round LK Blvd Northwest Off Ramp	11,500	1,400	-0.5%	2.7%	-0.5%	9.2%	325	1,050	1.14	1.18	1.14	11,000	850	-0.5%	2.7%	-0.5%	9.2%	300	1,025	1.09	1.09	1.11
WB US 10 Mainline	37,300	1,875	-	6.1%	-	8.0%	2,275	2,975	1.05	1.18	1.05	35,800	425	-	6.4%	-	7.9%	2,275	2,825	1.01	1.18	1.00
Round LK Blvd Northwest On Ramp	10,800	-450	-0.5%	6.2%	-0.5%	5.4%	675	575	0.96	0.96	0.96	11,100	-75	-0.5%	6.2%	-0.5%	5.4%	700	600	0.99	1.00	1.00
WB US 10 Mainline	48,000	1,425	-	6.1%	-	7.4%	2,950	3,550	1.03	1.12	1.04	47,000	350	-	6.3%	-	7.3%	2,975	3,425	1.01	1.13	1.00
7th Ave Off Ramp	7,900	375	-0.5%	6.1%	-0.5%	8.2%	475	650	1.05	1.06	1.04	7,500	0	-0.5%	6.1%	-0.5%	8.2%	450	625	1.00	1.00	1.00
WB US 10 Mainline	39,600	1,050	-	6.3%	-	7.3%	2,475	2,900	1.03	1.14	1.04	38,900	350	-	6.5%	-	7.2%	2,525	2,800	1.01	1.16	1.00
7th Ave On Ramp	5,500	-25	-0.5%	8.4%	-0.5%	7.3%	450	400	1.00	1.00	1.00	5,100	-450	-0.5%	8.4%	-0.5%	7.3%	425	375	0.93	0.94	0.94
WB US 10 Mainline	45,500	1,025	-	6.4%	-	7.3%	2,925	3,300	1.02	1.11	1.03	44,400	-100	-	6.6%	-	7.2%	2,950	3,175	1.00	1.12	0.99
N Ferry Street Off Ramp	13,000	400	-0.5%	6.5%	-0.5%	6.1%	850	800	1.03	1.03	1.03	12,200	-375	-0.5%	6.5%	-0.5%	6.1%	800	750	0.97	0.97	0.97
WB US 10 Mainline	32,300	625	-	6.4%	-	7.7%	2,075	2,500	1.02	1.15	1.03	32,000	275	-	6.7%	-	7.6%	2,150	2,425	1.01	1.19	1.00
N Ferry Street On ramp	3,300	-125	-0.5%	4.9%	-0.5%	4.2%	150	150	0.97	0.86	1.00	3,300	-75	-0.5%	4.9%	-0.5%	4.2%	150	150	0.97	0.86	1.00
WB US 10 Mainline	35,500	500	-	6.3%	-	7.5%	2,225	2,650	1.01	1.13	1.03	35,200	200	-	6.5%	-	7.3%	2,300	2,575	1.01	1.16	1.00

Table B-3

Peak Hour Freeway Volumes- **2040 Full Auxiliary and Partial Auxiliary Conditions**

	Year 2040 Full Auxiliary Conditions											Year 2040 Partial Auxiliary Conditions										
Description	Daily Weekday	Daily Weekday Delta	AM % Adj	AM %	PM % Adj	PM %	AM Peak Hour	PM Peak Hour	Daily	AM	PM	Daily Weekday	Daily Weekday Delta	AM % Adj	AM %	PM % Adj	PM %	AM Peak Hour	PM Peak Hour	Daily	AM	PM
EB US 10 Mainline	33,700	275	0.0%	8.1%	0.0%	6.9%	2,725	2,350	1.01	1.08	1.09	33,500	100	0.0%	8.1%	0.0%	6.9%	2,700	2,325	1.00	1.07	1.08
US 169/MN 47 Off Ramp	800	0	-0.5%	5.8%	-0.5%	5.8%	50	50	1.00	1.00	1.00	800	-25	-0.5%	5.8%	-0.5%	5.8%	50	50	1.00	1.00	1.00
EB US 10 Mainline	32,900	275	-	8.1%	-	7.0%	2,675	2,300	1.01	1.08	1.10	32,700	75	-	8.1%	-	7.0%	2,650	2,275	1.00	1.07	1.08
US 169/MN 47 On Ramp	14,000	675	-0.5%	4.9%	-0.5%	7.8%	675	1,075	1.05	1.04	1.05	13,500	200	-0.5%	4.9%	-0.5%	7.8%	650	1,050	1.02	1.00	1.02
EB US 10 Mainline	46,900	950	-	7.1%	-	7.2%	3,350	3,375	1.02	1.07	1.08	46,200	325	-	7.1%	-	7.2%	3,300	3,325	1.01	1.06	1.06
7th Ave Off Ramp	5,200	0	-0.5%	7.7%	-0.5%	7.1%	400	375	1.00	1.00	1.00	5,200	0	-0.5%	7.7%	-0.5%	7.1%	400	375	1.00	1.00	1.00
EB US 10 Mainline	40,600	950	-	7.3%	-	7.4%	2,950	3,000	1.03	1.08	1.09	39,900	325	-	7.3%	-	7.4%	2,900	2,950	1.01	1.06	1.07
7th Ave On Ramp	8,700	-50	-0.5%	7.6%	-0.5%	7.6%	675	675	1.00	1.00	1.00	8,800	75	-0.5%	7.6%	-0.5%	7.6%	675	675	1.01	1.00	1.00
EB US 10 Mainline	50,400	900	-	7.2%	-	7.3%	3,625	3,675	1.02	1.07	1.07	49,900	400	-	7.2%	-	7.3%	3,575	3,625	1.01	1.05	1.06
Round Lk Blvd Off Ramp	10,300	-150	-0.5%	2.5%	-0.5%	7.7%	250	800	0.99	1.00	1.00	10,300	-75	-0.5%	2.5%	-0.5%	7.7%	250	800	0.99	1.00	1.00
EB US 10 Mainline	36,800	1,050	-	9.2%	-	7.8%	3,375	2,875	1.03	1.07	1.10	36,200	475	-	9.2%	-	7.8%	3,325	2,825	1.01	1.06	1.08
Round Lk Blvd On Ramp	9,500	875	-0.5%	9.4%	-0.5%	5.6%	900	525	1.10	1.13	1.11	9,100	450	-0.5%	9.4%	-0.5%	5.6%	850	500	1.06	1.06	1.05
EB TH 10 Mainline/ E of Round Lk	50,800	1,925	-	8.4%	-	6.7%	4,275	3,400	1.04	1.08	1.10	49,800	925	-	8.4%	-	6.7%	4,175	3,325	1.02	1.06	1.07
Main Street Off Ramp	7,700	275	-0.5%	3.2%	-0.5%	8.7%	250	675	1.04	1.11	1.04	7,000	-450	-0.5%	3.2%	-0.5%	8.7%	225	600	0.95	1.00	0.92
EB US 10 Mainline	43,300	1,650	-	9.3%	-	6.3%	4,025	2,725	1.04	1.08	1.11	43,000	1,375	-	9.2%	-	6.3%	3,950	2,725	1.03	1.06	1.11
Main Street On Ramp	12,500	1,075	-0.5%	6.4%	-0.5%	5.9%	800	750	1.10	1.10	1.11	12,500	1,075	-0.5%	6.4%	-0.5%	5.9%	800	750	1.10	1.10	1.11
EB US 10 Mainline	55,900	2,725	-	8.6%	-	6.2%	4,825	3,475	1.05	1.08	1.11	55,700	2,450	-	8.5%	-	6.2%	4,750	3,475	1.05	1.07	1.11
Hanson Blvd Off Ramp	8,200	1,175	-0.5%	4.0%	-0.5%	8.1%	325	675	1.17	1.18	1.17	7,900	925	-0.3%	4.2%	-0.5%	8.1%	325	650	1.13	1.18	1.13
EB US 10 Mainline	47,400	1,150	-	9.5%	-	5.9%	4,500	2,800	1.03	1.08	1.10	47,700	1,525	-	9.3%	-	5.9%	4,425	2,825	1.03	1.06	1.11
Hanson Blvd On Ramp	18,600	-825	-0.5%	10.9%	-0.5%	5.4%	2,025	1,000	0.96	0.95	0.95	18,700	-750	-0.3%	11.2%	-0.5%	5.4%	2,100	1,000	0.96	0.99	0.95
EB US 10 Mainline	68,200	725	-	9.6%	-	5.6%	6,525	3,800	1.01	1.04	1.06	68,300	775	-	9.6%	-	5.6%	6,525	3,825	1.01	1.04	1.06
WB US 10 Mainline	58,000	950	0.0%	4.5%	0.0%	9.8%	2,600	5,650	1.02	1.14	1.02	57,900	850	0.0%	4.5%	0.0%	9.8%	2,600	5,650	1.02	1.14	1.02
Hanson Blvd NW Off Ramp	17,000	-1,200	-0.5%	3.5%	-0.5%	8.9%	600	1,525	0.93	0.92	0.94	17,200	-1,000	-0.5%	3.5%	-0.3%	9.2%	600	1,575	0.95	0.92	0.97
WB US 10 Mainline	45,100	1,900	-	4.4%	-	9.1%	2,000	4,125	1.04	1.23	1.05	45,100	1,850	-	4.4%	-	9.0%	2,000	4,075	1.04	1.23	1.04
Hanson Blvd NW On Ramp	6,900	1,000	-0.5%	6.0%	-0.5%	6.4%	425	450	1.17	1.21	1.13	6,800	900	-0.5%	6.0%	0.0%	6.9%	400	475	1.15	1.14	1.19
WB US 10 Mainline	52,600	3,150	-	4.6%	-	8.7%	2,425	4,575	1.06	1.23	1.06	52,200	2,750	-	4.6%	-	8.7%	2,400	4,550	1.06	1.22	1.05
Main Street NW Off Ramp	11,900	1,075	-0.5%	2.9%	-0.5%	8.8%	350	1,050	1.10	1.17	1.11	12,400	1,625	-0.5%	2.9%	-0.5%	8.8%	350	1,100	1.15	1.17	1.16
WB US 10 Mainline	40,700	2,075	-	5.1%	-	8.7%	2,075	3,525	1.05	1.24	1.04	39,700	1,125	-	5.2%	-	8.7%	2,050	3,450	1.03	1.22	1.02
Main Street Northwest On Ramp	6,900	50	-0.5%	7.7%	-0.5%	5.4%	525	375	1.01	1.00	1.00	6,800	-50	-0.5%	7.7%	-0.3%	5.6%	525	375	1.00	1.00	1.00
WB US 10 Mainline	47,600	2,125	-	5.5%	-	8.2%	2,600	3,900	1.05	1.18	1.04	46,600	1,075	-	5.5%	-	8.2%	2,575	3,825	1.02	1.17	1.02
Round LK Blvd Northwest Off Ramp	11,100	950	-0.5%	2.7%	-0.5%	9.2%	300	1,025	1.10	1.09	1.11	10,600	475	-0.5%	2.7%	-0.5%	9.2%	300	975	1.05	1.09	1.05
WB US 10 Mainline	36,600	1,175	-	6.3%	-	7.9%	2,300	2,875	1.03	1.19	1.02	36,000	600	-	6.3%	-	7.9%	2,275	2,850	1.02	1.18	1.01
Round LK Blvd Northwest On Ramp	11,000	-200	-0.5%	6.2%	-0.5%	5.4%	675	600	0.98	0.96	1.00	11,100	-75	-0.5%	6.2%	-0.3%	5.7%	700	625	0.99	1.00	1.04
WB US 10 Mainline	47,600	975	-	6.3%	-	7.3%	2,975	3,475	1.02	1.13	1.01	47,100	525	-	6.3%	-	7.4%	2,975	3,475	1.01	1.13	1.01
7th Ave Off Ramp	7,800	250	-0.5%	6.1%	-0.5%	8.2%	475	650	1.04	1.06	1.04	7,800	250	-0.5%	6.1%	-0.5%	8.2%	475	650	1.04	1.06	1.04
WB US 10 Mainline	39,200	725	-	6.4%	-	7.2%	2,500	2,825	1.02	1.15	1.01	38,800	275	-	6.4%	-	7.3%	2,500	2,825	1.01	1.15	1.01
7th Ave On Ramp	5,200	-350	-0.5%	8.4%	-0.5%	7.3%	425	375	0.95	0.94	0.94	5,100	-425	-0.5%	8.4%	-0.3%	7.5%	425	375	0.93	0.94	0.94
WB US 10 Mainline	44,900	375	-	6.5%	-	7.1%	2,925	3,200	1.01	1.11	1.00	44,400	-150	-	6.6%	-	7.2%	2,925	3,200	1.00	1.11	1.00
N Ferry Street Off Ramp	12,600	25	-0.5%	6.5%	-0.5%	6.1%	825	775	1.00	1.00	1.00	12,300	-325	-0.5%	6.5%	-0.5%	6.1%	800	750	0.98	0.97	0.97
WB US 10 Mainline	32,100	350	-	6.5%	-	7.6%	2,100	2,425	1.01	1.17	1.00	31,900	175	-	6.7%	-	7.7%	2,125	2,450	1.01	1.18	1.01
N Ferry Street On ramp	3,300	-125	-0.5%	4.9%	-0.5%	4.2%	150	150	0.97	0.86	1.00	3,300	-75	-0.5%	4.9%	-0.5%	4.2%	150	150	0.97	0.86	1.00
WB US 10 Mainline	35,200	225	-	6.4%	-	7.3%	2,250	2,575	1.01	1.14	1.00	35,100	100	-	6.5%	-	7.4%	2,275	2,600	1.00	1.15	1.01

Appendix C: Forecast Reasonableness Check Tables

Table C1 Existing Condition

AM Peak Hour Percentage and Directional Distribution Comparison

Facility	Segment	Existing Condition												
		Number of Lanes		Capacity		Daily Directional		Two Way			EB		WB	
		EB	WB	EB	WB	EB	WB	Daily	Peak	% of Daily	AM pk	Dir %	AM pk	Dir %
TH 10: US 169/MN 47 to Hanson Blvd	West of Ferry St	2	2	4,000	4,000	29,500	30,800	60,300	4,300	7.1%	2,375	55%	1,925	45%
	Ferry St to 7th Ave	2	2	4,000	4,000	40,400	38,300	78,700	5,575	7.1%	2,975	53%	2,600	47%
	7th Ave to Round Lake Blvd	2	2	4,000	4,000	43,600	41,100	84,700	5,875	6.9%	3,225	55%	2,650	45%
	Round Lake Blvd to Main Street	2	2	4,000	4,000	43,000	39,900	82,900	6,150	7.4%	3,825	62%	2,325	38%
	Main Street to Hanson Blvd	2	2	4,000	4,000	47,000	43,100	90,100	6,425	7.1%	4,325	67%	2,100	33%
	East of Hanson Blvd	3	3	6,000	6,000	59,100	49,700	108,800	8,325	7.7%	6,100	73%	2,225	27%

Table C2 Existing Condition

PM Peak Hour Percentage and Directional Distribution Comparison

Facility	Segment	Existing Condition												
		Number of Lanes		Capacity		Daily Directional		Two Way			EB		WB	
		EB	WB	EB	WB	EB	WB	Daily	Peak	% of Daily	PM pk	Dir %	PM pk	Dir %
TH 10: US 169/MN 47 to Hanson Blvd	West of Ferry St	2	2	4,000	4,000	29,500	30,800	60,300	4,500	7.5%	2,100	47%	2,400	53%
	Ferry St to 7th Ave	2	2	4,000	4,000	40,400	38,300	78,700	5,700	7.2%	2,700	47%	3,000	53%
	7th Ave to Round Lake Blvd	2	2	4,000	4,000	43,600	41,100	84,700	6,600	7.8%	3,300	50%	3,300	50%
	Round Lake Blvd to Main Street	2	2	4,000	4,000	43,000	39,900	82,900	6,500	7.8%	3,000	46%	3,500	54%
	Main Street to Hanson Blvd	2	2	4,000	4,000	47,000	43,100	90,100	7,100	7.9%	3,100	44%	4,000	56%
	East of Hanson Blvd	3	3	6,000	6,000	59,100	49,700	108,800	8,500	7.8%	3,600	42%	4,900	58%

Table C3 2040 No Build Conditions

AM Peak Hour Percentage and Directional Distribution Comparison

Facility	Segment	Year 2040 No Build													Daily Growth Factor	AM Growth Factor
		Number of Lanes		Capacity		Daily Directional		Two Way			EB		WB			
		EB	WB	EB	WB	EB	WB	Daily	Peak	% of Daily	AM pk	Dir %	AM pk	Dir %	2015-2040	2015-2040
TH 10: US 169/MN 47 to Hanson Blvd	West of Ferry St	2	2	4,000	4,000	33,400	35,000	68,400	4,500	6.6%	2,525	56%	1,975	44%	1.13	1.05
	Ferry St to 7th Ave	2	2	4,000	4,000	45,900	44,500	90,400	5,750	6.4%	3,125	54%	2,625	46%	1.15	1.03
	7th Ave to Round Lake Blvd	2	2	4,000	4,000	49,500	46,600	96,100	6,025	6.3%	3,400	56%	2,625	44%	1.13	1.03
	Round Lake Blvd to Main Street	2	2	4,000	4,000	48,900	45,500	94,400	6,150	6.5%	3,950	64%	2,200	36%	1.14	1.00
	Main Street to Hanson Blvd	2	2	4,000	4,000	53,200	49,400	102,600	6,425	6.3%	4,450	69%	1,975	31%	1.14	1.00
	East of Hanson Blvd	3	3	6,000	6,000	67,500	57,000	124,500	8,575	6.9%	6,300	73%	2,275	27%	1.14	1.03

Table C4 2040 No Build Conditions

PM Peak Hour Percentage and Directional Distribution Comparison

Facility	Segment	Year 2040 No Build													Daily Growth Factor	PM Growth Factor
		Number of Lanes		Capacity		Daily Directional		Two Way			EB		WB			
		EB	WB	EB	WB	EB	WB	Daily	Peak	% of Daily	PM pk	Dir %	PM pk	Dir %	2017-2040	2017-2040
TH 10: US 169/MN 47 to Hanson Blvd	West of Ferry St	2	2	4,000	4,000	33,400	35,000	68,400	4,725	6.9%	2,150	46%	2,575	54%	1.13	1.05
	Ferry St to 7th Ave	2	2	4,000	4,000	45,900	44,500	90,400	6,325	7.0%	3,125	49%	3,200	51%	1.15	1.11
	7th Ave to Round Lake Blvd	2	2	4,000	4,000	49,500	46,600	96,100	6,850	7.1%	3,425	50%	3,425	50%	1.13	1.04
	Round Lake Blvd to Main Street	2	2	4,000	4,000	48,900	45,500	94,400	6,850	7.3%	3,100	45%	3,750	55%	1.14	1.05
	Main Street to Hanson Blvd	2	2	4,000	4,000	53,200	49,400	102,600	7,450	7.3%	3,125	42%	4,325	58%	1.14	1.05
	East of Hanson Blvd	3	3	6,000	6,000	67,500	57,000	124,500	9,150	7.3%	3,600	39%	5,550	61%	1.14	1.08

Table C5 2040 Full Build Conditions

AM Peak Hour Percentage and Directional Distribution Comparison

Facility	Segment	Year 2040 Full Build													Daily Growth Factor	AM Growth Factor
		Number of Lanes		Capacity		Daily Directional		Two Way			EB		WB			
		EB	WB	EB	WB	EB	WB	Daily	Peak	% of Daily	AM pk	Dir %	AM pk	Dir %	2040 No Build to Build	2040 No Build to Build
TH 10: US 169/MN 47 to Hanson Blvd	West of Ferry St	2	2	4,000	4,000	33,900	35,500	69,400	4,775	6.9%	2,550	53%	2,225	47%	1.01	1.06
	Ferry St to 7th Ave	2	2	4,000	4,000	46,800	45,500	92,300	6,100	6.6%	3,175	52%	2,925	48%	1.02	1.06
	7th Ave to Round Lake Blvd	2	2	4,000	4,000	51,000	48,000	99,000	6,425	6.5%	3,475	54%	2,950	46%	1.03	1.07
	Round Lake Blvd to Main Street	3	3	6,000	6,000	52,000	48,800	100,800	6,775	6.7%	4,175	62%	2,600	38%	1.07	1.10
	Main Street to Hanson Blvd	3	3	6,000	6,000	56,600	53,000	109,600	7,100	6.5%	4,700	66%	2,400	34%	1.07	1.11
	East of Hanson Blvd	3	3	6,000	6,000	68,200	58,000	126,200	8,875	7.0%	6,275	71%	2,600	29%	1.01	1.03

Table C6 2040 Full Build Conditions

PM Peak Hour Percentage and Directional Distribution Comparison

Facility	Segment	Year 2040 Full Build													Daily Growth Factor	PM Growth Factor
		Number of Lanes		Capacity		Daily Directional		Two Way			EB		WB			
		EB	WB	EB	WB	EB	WB	Daily	Peak	% of Daily	PM pk	Dir %	PM pk	Dir %	2040 No Build to Build	2040 No Build to Build
TH 10: US 169/MN 47 to Hanson Blvd	West of Ferry St	2	2	4,000	4,000	33,900	35,500	69,400	5,000	7.2%	2,350	47%	2,650	53%	1.01	1.06
	Ferry St to 7th Ave	2	2	4,000	4,000	46,800	45,500	92,300	6,675	7.2%	3,375	51%	3,300	49%	1.02	1.06
	7th Ave to Round Lake Blvd	2	2	4,000	4,000	51,000	48,000	99,000	7,250	7.3%	3,700	51%	3,550	49%	1.03	1.06
	Round Lake Blvd to Main Street	3	3	6,000	6,000	52,000	48,800	100,800	7,475	7.4%	3,450	46%	4,025	54%	1.07	1.09
	Main Street to Hanson Blvd	3	3	6,000	6,000	56,600	53,000	109,600	8,125	7.4%	3,500	43%	4,625	57%	1.07	1.09
	East of Hanson Blvd	3	3	6,000	6,000	68,200	58,000	126,200	9,425	7.5%	3,775	40%	5,650	60%	1.01	1.03

Table C7 2040 Partial Build Conditions

AM Peak Hour Percentage and Directional Distribution Comparison

Facility	Segment	Year 2040 Partial Build													Daily Growth Factor	AM Growth Factor
		Number of Lanes		Capacity		Daily Directional		Two Way			EB		WB			
		EB	WB	EB	WB	EB	WB	Daily	Peak	% of Daily	AM pk	Dir %	AM pk	Dir %	2040 No Build to Partial Build	2040 No Build to Partial Build
TH 10: US 169/MN 47 to Hanson Blvd	West of Ferry St	2	2	4,000	4,000	33,700	35,200	68,900	5,025	7.3%	2,725	54%	2,300	46%	1.01	1.12
	Ferry St to 7th Ave	2	2	4,000	4,000	46,500	44,400	90,900	6,300	6.9%	3,350	53%	2,950	47%	1.01	1.10
	7th Ave to Round Lake Blvd	2	2	4,000	4,000	49,600	47,000	96,600	6,550	6.8%	3,575	55%	2,975	45%	1.01	1.09
	Round Lake Blvd to Main Street	2	2	4,000	4,000	50,000	46,800	96,800	6,800	7.0%	4,225	62%	2,575	38%	1.03	1.11
	Main Street to Hanson Blvd	3	3	6,000	6,000	56,200	52,700	108,900	7,225	6.6%	4,825	67%	2,400	33%	1.06	1.12
	East of Hanson Blvd	3	3	6,000	6,000	68,500	58,300	126,800	9,100	7.2%	6,500	71%	2,600	29%	1.02	1.06

Table C8 2040 Partial Build Conditions

PM Peak Hour Percentage and Directional Distribution Comparison

Facility	Segment	Year 2040 Partial Build													Daily Growth Factor	PM Growth Factor
		Number of Lanes		Capacity		Daily Directional		Two Way			EB		WB			
		EB	WB	EB	WB	EB	WB	Daily	Peak	% of Daily	PM pk	Dir %	PM pk	Dir %	2040 No Build to Partial Build	2040 No Build to Partial Build
TH 10: US 169/MN 47 to Hanson Blvd	West of Ferry St	2	2	4,000	4,000	33,700	35,200	68,900	4,925	7.1%	2,350	48%	2,575	52%	1.01	1.04
	Ferry St to 7th Ave	2	2	4,000	4,000	46,500	44,400	90,900	6,550	7.2%	3,375	52%	3,175	48%	1.01	1.04
	7th Ave to Round Lake Blvd	2	2	4,000	4,000	49,600	47,000	96,600	7,075	7.3%	3,650	52%	3,425	48%	1.01	1.03
	Round Lake Blvd to Main Street	2	2	4,000	4,000	50,000	46,800	96,800	7,225	7.5%	3,375	47%	3,850	53%	1.03	1.05
	Main Street to Hanson Blvd	3	3	6,000	6,000	56,200	52,700	108,900	8,150	7.5%	3,525	43%	4,625	57%	1.06	1.09
	East of Hanson Blvd	3	3	6,000	6,000	68,500	58,300	126,800	9,575	7.6%	3,875	40%	5,700	60%	1.02	1.05

Table C9 2040 Full Auxiliary Conditions

AM Peak Hour Percentage and Directional Distribution Comparison

Facility	Segment	Year 2040 Full Auxilary													Daily Growth Factor	AM Growth Factor
		Number of Lanes		Capacity		Daily Directional		Two Way			EB		WB			
		EB	WB	EB	WB	EB	WB	Daily	Peak	% of Daily	AM pk	Dir %	AM pk	Dir %	2040 No Build to Full Auxiliary	2040 No Build to Full Auxiliary
TH 10: US 169/MN 47 to Hanson Blvd	West of Ferry St	2	2	4,000	4,000	33,700	35,200	68,900	4,975	7.2%	2,725	55%	2,250	45%	1.01	1.11
	Ferry St to 7th Ave	2	2	4,000	4,000	46,900	44,900	91,800	6,275	6.8%	3,350	53%	2,925	47%	1.02	1.09
	7th Ave to Round Lake Blvd	2	2	4,000	4,000	50,400	47,600	98,000	6,600	6.7%	3,625	55%	2,975	45%	1.02	1.10
	Round Lake Blvd to Main Street	2+	2+	5,500	5,500	50,800	47,600	98,400	6,875	7.0%	4,275	62%	2,600	38%	1.04	1.12
	Main Street to Hanson Blvd	2+	2+	5,500	5,500	55,900	52,600	108,500	7,250	6.7%	4,825	67%	2,425	33%	1.06	1.13
	East of Hanson Blvd	3	3	6,000	6,000	68,200	58,000	126,200	9,125	7.2%	6,525	72%	2,600	28%	1.01	1.06

Table C10 2040 Full Auxiliary Conditions

PM Peak Hour Percentage and Directional Distribution Comparison

Facility	Segment	Year 2040 Full Auxilary													Daily Growth Factor	PM Growth Factor
		Number of Lanes		Capacity		Daily Directional		Two Way			EB		WB			
		EB	WB	EB	WB	EB	WB	Daily	Peak	% of Daily	PM pk	Dir %	PM pk	Dir %	2040 No Build to Full Auxiliary	2040 No Build to Full Auxiliary
TH 10: US 169/MN 47 to Hanson Blvd	West of Ferry St	2	2	4,000	4,000	33,700	35,200	68,900	4,925	7.1%	2,350	48%	2,575	52%	1.01	1.04
	Ferry St to 7th Ave	2	2	4,000	4,000	46,900	44,900	91,800	6,575	7.2%	3,375	51%	3,200	49%	1.02	1.04
	7th Ave to Round Lake Blvd	2	2	4,000	4,000	50,400	47,600	98,000	7,150	7.3%	3,675	51%	3,475	49%	1.02	1.04
	Round Lake Blvd to Main Street	2+	2+	5,500	5,500	50,800	47,600	98,400	7,300	7.4%	3,400	47%	3,900	53%	1.04	1.07
	Main Street to Hanson Blvd	2+	2+	5,500	5,500	55,900	52,600	108,500	8,050	7.4%	3,475	43%	4,575	57%	1.06	1.08
	East of Hanson Blvd	3	3	6,000	6,000	68,200	58,000	126,200	9,450	7.5%	3,800	40%	5,650	60%	1.01	1.03

Table C11 2040 Partial Auxiliary Conditions

AM Peak Hour Percentage and Directional Distribution Comparison

Facility	Segment	Year 2040 Partial Auxilary													Daily Growth Factor	AM Growth Factor
		Number of Lanes		Capacity		Daily Directional		Two Way			EB		WB			
		EB	WB	EB	WB	EB	WB	Daily	Peak	% of Daily	AM pk	Dir %	AM pk	Dir %	2040 No Build to Partial Auxiliary	2040 No Build to Partial Auxiliary
TH 10: US 169/MN 47 to Hanson Blvd	West of Ferry St	2	2	4,000	4,000	33,500	35,100	68,600	4,975	7.3%	2,700	54%	2,275	46%	1.00	1.11
	Ferry St to 7th Ave	2	2	4,000	4,000	46,200	44,400	90,600	6,225	6.9%	3,300	53%	2,925	47%	1.00	1.08
	7th Ave to Round Lake Blvd	2	2	4,000	4,000	49,900	47,100	97,000	6,550	6.8%	3,575	55%	2,975	45%	1.01	1.09
	Round Lake Blvd to Main Street	2	2	4,000	4,000	49,800	46,600	96,400	6,750	7.0%	4,175	62%	2,575	38%	1.02	1.10
	Main Street to Hanson Blvd	2+	2+	5,500	5,500	55,700	52,200	107,900	7,150	6.6%	4,750	66%	2,400	34%	1.05	1.11
	East of Hanson Blvd	3	3	6,000	6,000	68,300	57,900	126,200	9,125	7.2%	6,525	72%	2,600	28%	1.01	1.06

Table C12 2040 Partial Auxiliary Conditions

PM Peak Hour Percentage and Directional Distribution Comparison

Facility	Segment	Year 2040 Partial Auxilary													Daily Growth Factor	PM Growth Factor
		Number of Lanes		Capacity		Daily Directional		Two Way			EB		WB			
		EB	WB	EB	WB	EB	WB	Daily	Peak	% of Daily	PM pk	Dir %	PM pk	Dir %	2040 No Build to Partial Auxiliary	2040 No Build to Partial Auxiliary
TH 10: US 169/MN 47 to Hanson Blvd	West of Ferry St	2	2	4,000	4,000	33,500	35,100	68,600	4,925	7.2%	2,325	47%	2,600	53%	1.00	1.04
	Ferry St to 7th Ave	2	2	4,000	4,000	46,200	44,400	90,600	6,525	7.2%	3,325	51%	3,200	49%	1.00	1.03
	7th Ave to Round Lake Blvd	2	2	4,000	4,000	49,900	47,100	97,000	7,100	7.3%	3,625	51%	3,475	49%	1.01	1.04
	Round Lake Blvd to Main Street	2	2	4,000	4,000	49,800	46,600	96,400	7,150	7.4%	3,325	47%	3,825	53%	1.02	1.04
	Main Street to Hanson Blvd	2+	2+	5,500	5,500	55,700	52,200	107,900	8,025	7.4%	3,475	43%	4,550	57%	1.05	1.08
	East of Hanson Blvd	3	3	6,000	6,000	68,300	57,900	126,200	9,475	7.5%	3,825	40%	5,650	60%	1.01	1.04

Attachment C

Concept Cost Estimates

SRF Consulting Group, Inc. — Engineers Planners Designers

US 10 ADD-A-LANE

Concept Cost Estimate (based upon 2018 bid price information)

Prepared By: SRF Consulting Group, Inc., July 24, 2019

					Inside Add-Lane Alternative		Outside Add-Lane Alternative		Dynamic Shoulders Alternative	
	ITEM DESCRIPTION		**UNIT**	**UNIT PRICE**	**EST. QUANTITY**	**EST. AMOUNT**	**EST. QUANTITY**	**EST. AMOUNT**	**EST. QUANTITY**	**EST. AMOUNT**
PAVING AND GRADING COSTS										
1	2106 Excavation - common & subgrade		cu. yd.	$10.00	117,800	$1,178,000	379,300	$3,793,000	45,600	$456,000
2	2106 Common Embankment (CV)		cu. yd.	$4.00			32,400	$129,600		
3	2106 Granular Subgrade (CV)		cu. yd.	$14.00	29,500	$413,000	28,400	$397,600	11,400	$159,600
4	Mainline Pavement	(1)	sq. yd.	$35.00	60,100	$2,103,500	57,800	$2,023,000		
5	Mainline Shoulder Pavement	(1)	sq. yd.	$20.00	28,200	$564,000	27,200	$544,000		
6	Mainline Bus Shoulder Pavement		sq. yd.	$35.00					34,200	$1,197,000
7	Concrete Curb and Gutter		lin. ft.	$20.00			3,600	$72,000		
8	Concrete Median Barrier (Permanent)		lin. ft.	$125.00	20,200	$2,525,000				
9	Removals - Pavement		sq. yd.	$7.50	57,200	$429,000	59,300	$444,750	32,700	$245,250
	SUBTOTAL PAVING AND GRADING COSTS:					**$7,212,500**		**$7,403,950**		**$2,057,850**
DRAINAGE, UTILITIES AND EROSION CONTROL										
1	Drainage - urban		15%			$1,082,000				
2	Drainage - rural	(3)	mile	$110,000	1.00	$110,000	4.60	$506,000	1.00	$110,000
3	72" RCP Culvert Extension at Coon Creek		l.s.	$3,000			1	$3,000		
4	Turf Establishment & Erosion Control		10%			$722,000		$741,000		$206,000
5	Landscaping		2%			$145,000		$149,000		$42,000
	SUBTOTAL DRAINAGE, UTILITIES AND EROSION CONTROL					**$2,059,000**		**$1,399,000**		**$358,000**
NOISE ABATEMENT COSTS										
1	NOISE WALL (Ground Mounted - Con. Post & Concrel		sq. ft.	$36	225000	$8,100,000	225000	$8,100,000	225000	$8,100,000
	SUBTOTAL NOISE ABATEMENT COSTS:					**$8,100,000**		**$8,100,000**		**$8,100,000**
SIGNING & STRIPING COSTS										
1	Mainline Signing (C&D)		mile	$35,000	3.4	$119,000	3.4	$119,000	3.4	$119,000
2	Mainline Striping		mile	$5,000	3.4	$17,000	3.4	$17,000	3.4	$17,000
3	Permanent ITS - Dynamic Shoulder	(4)	l.s.	$2,000,000					1	$2,000,000
	SUBTOTAL SIGNING & STRIPING COSTS:					**$136,000**		**$136,000**		**$2,136,000**
	SUBTOTAL CONSTRUCTION COSTS:					**$17,507,500**		**$17,038,950**		**$12,651,850**
MISCELLANEOUS COSTS										
1	Mobilization		5%			$876,000		$852,000		$633,000
2	Non Quantified Minor Items		15%			$2,627,000		$2,556,000		$1,898,000
3	Temporary Pavement & Drainage		5%			$876,000		$852,000		$633,000
4	Traffic Control		3%			$526,000		$512,000		$380,000
	SUBTOTAL MISCELLANEOUS COSTS:					**$4,905,000**		**$4,772,000**		**$3,544,000**
ESTIMATED TOTAL CONSTRUCTION COSTS without Contingency:						**$22,412,500**		**$21,810,950**		**$16,195,850**
1	Contingency or "risk"		20%			$2,863,000		$2,743,000		$1,620,000
ESTIMATED TOTAL CONSTRUCTION COSTS PLUS CONTINGENCY:						**$25,275,500**		**$24,553,950**		**$17,815,850**
	OTHER PROJECT COSTS:									
	WETLAND MITIGATION		credit	$82,500			3	$247,500	1.5	$123,750
	SUBTOTAL OTHER PROJECT COSTS							**$247,500**		**$123,750**
	TOTAL PROJECT COST					**$25,275,500**		**$24,801,450**		**$17,939,600**
	INFLATION COST (CURRENT YR. TO YR. OF OPEN		Years	3%						
	TOTAL PROJECT COST (OPENING YEAR DOLLARS)					**$25,275,500**		**$24,801,450**		**$17,939,600**

NOTE (1) Includes aggregate base class 5 and PASB or OGAB, as appropriate.
(2) Includes aggregate base class 5.
(3) Does not include pavement edge drains, see separate item.
(4) Includes 18' DMS prior to dynamic shoulder and exit / entrance ramp. Assumes 5 WB DMS and 5 EB DMS. Does not include detection modifications or miscellaneous ITS impacts for noise w

Attachment D

Traffic Noise Tables

H:\Projects\12000\12360\Design\Graphics\12360_gr01_noisewalls.dgn

SRF

US 10 Add-a-Lane

Potential Noisewall Locations

Anoka County

Job #12360
9/1/2019

Figure 1

Table 1. Noise Mitigation Cost Effectiveness Results (Noise Wall 1, South Side of TH 10, Main Street to Coon Creek Tributary) (20-Foot Tall Noise Wall)

Receptor ID	L_{eq} Noise Level, Build year 2040 (no noise wall)	L_{eq} Noise Level, Build year 2040 (with noise wall)	Reduction (in dBA) with noise wall	Number of residences, commercial or industrial establishments	Number of benefited residences, commercial or industrial establishments (1)	Design goal reduction ≥ 7 dBA (2)	Length of wall (feet)	Wall Area (sq ft)	Total cost of wall $36/sq ft	Cost/ Benefited Receptor
NA1	60.6	58.3	2.3	2	0	0	4,181	83,620	$3,010,320	$52,813
NA2	60.4	57.4	3.0	2	0	0				
NA3	61.3	56.5	4.8	2	0	0				
NA4	65.7	58.4	7.3	1	1	1				
NA5	**66.2**	58.6	7.6	1	1	1				
NA6	**67.1**	58.9	8.2	1	1	1				
NA7	**67.0**	58.9	8.1	1	1	1				
NA8	**67.2**	59.0	8.2	1	1	1				
NA9	**67.2**	59.1	8.1	1	1	1				
NA10	**67.5**	59.2	8.3	1	1	1				
NA11	**67.3**	58.8	8.5	1	1	1				
NA12	**69.3**	59.8	9.5	1	1	1				
NA13	65.6	57.5	8.1	1	1	1				
NA14	**67.4**	58.5	8.9	1	1	1				
NA15	**69.6**	59.6	10.0	1	1	1				
NA16	**73.9**	61.3	12.6	1	1	1				
NA17	61.4	56.0	5.4	1	1	0				
NA18	61.8	56.0	5.8	1	1	0				

Receptor ID	L_{eq} Noise Level, Build year 2040 (no noise wall)	L_{eq} Noise Level, Build year 2040 (with noise wall)	Reduction (in dBA) with noise wall	Number of residences, commercial or industrial establishments	Number of benefited residences, commercial or industrial establishments (1)	Design goal reduction ≥ 7 dBA (2)	Length of wall (feet)	Wall Area (sq ft)	Total cost of wall $36/sq ft	Cost/ Benefited Receptor
NA19	62.3	56.0	6.3	1	1	0				
NA20	62.4	56.0	6.4	1	1	0				
NA21	62.8	56.1	6.7	1	1	0				
NA22	63.1	56.2	6.9	1	1	0				
NA23	63.7	56.1	7.6	1	1	1				
NA24	63.5	56.1	7.4	1	1	1				
NB1	**66.7**	59.2	7.5	1	1	1				
NB2	**69.1**	60.2	8.9	1	1	1				
NB3	**72.2**	61.2	11.0	1	1	1				
NB4	**75.6**	63.5	12.1	1	1	1				
NB5	**75.9**	62.9	13.0	1	1	1				
NB6	**76.0**	62.9	13.1	1	1	1				
NB7	**76.2**	62.6	13.6	1	1	1				
NB8	**76.2**	62.2	14.0	1	1	1				
NB9	**76.0**	61.9	14.1	1	1	1				
NB10	**76.0**	61.6	14.4	1	1	1				
NB11	**75.8**	61.3	14.5	1	1	1				
NB12	**75.9**	61.3	14.6	1	1	1				
NB13	**75.8**	61.2	14.6	1	1	1				

Receptor ID	L_{eq} Noise Level, Build year 2040 (no noise wall)	L_{eq} Noise Level, Build year 2040 (with noise wall)	Reduction (in dBA) with noise wall	Number of residences, commercial or industrial establishments	Number of benefited residences, commercial or industrial establishments (1)	Design goal reduction ≥ 7 dBA (2)	Length of wall (feet)	Wall Area (sq ft)	Total cost of wall $36/sq ft	Cost/ Benefited Receptor
NB14	**68.6**	59.5	9.1	1	1	1				
NB15	**69.7**	59.6	10.1	1	1	1				
NB16	**69.6**	59.4	10.2	1	1	1				
NB17	**69.3**	59.5	9.8	1	1	1				
NB18	**68.9**	59.7	9.2	1	1	1				
NB19	**68.9**	60.5	8.4	1	1	1				
NB20	**68.9**	61.3	7.6	1	1	1				
NB21	**69.0**	62.1	6.9	1	1	0				
NB22	**69.2**	62.6	6.6	1	1	0				
NB23	**69.1**	63.2	5.9	1	1	0				
NB24	65.9	60.5	5.4	1	1	0				
NB25	64.7	59.6	5.1	1	1	0				
NB26	63.6	60.4	3.2	1	0	0				
NB27	64.6	61.2	3.4	1	0	0				
NB28	63.5	60.3	3.2	1	0	0				
NB29	**66.0**	59.8	6.2	1	1	0				
NB30	**66.2**	59.3	6.9	1	1	0				
PARKA1	**72.0**	60.2	11.8	1	1	1				
PARKA2	**71.3**	60.2	11.1	1	1	1				

Receptor ID	L_{eq} Noise Level, Build year 2040 (no noise wall)	L_{eq} Noise Level, Build year 2040 (with noise wall)	Reduction (in dBA) with noise wall	Number of residences, commercial or industrial establishments	Number of benefited residences, commercial or industrial establishments (1)	Design goal reduction ≥ 7 dBA (2)	Length of wall (feet)	Wall Area (sq ft)	Total cost of wall $36/sq ft	Cost/ Benefited Receptor
PARKA3	**71.0**	60.2	10.8	1	1	1				
PARKA4	**70.2**	60.1	10.1	1	1	1				
PARKA5	**69.5**	60.0	9.5	1	1	1				
PARKA6	**69.8**	60.1	9.7	1	1	1				
PARKA7	**70.2**	60.1	10.1	1	1	1				
PARKA8	**70.2**	60.0	10.2	1	1	1				
PARKA9	**70.5**	60.3	10.2	1	1	1				

Bold numbers approach or exceed Federal noise abatement criteria.

(1) Number of benefited residences, commercial establishments, or industrial establishments with a minimum 5 dBA reduction.

(2) Noise barrier must meet MnDOT's noise reduction design goal of at least 7 dBA at a minimum of one benefited receptor behind each noise barrier.

Table 2. Noise Mitigation Cost Effectiveness Results (Noise Wall 2, South Side of TH 10, Coon Creek Tributary to Hanson Boulevard) (20-Foot Tall Noise Wall)

Receptor ID	L_{eq} Noise Level, Build year 2040 (no noise wall)	L_{eq} Noise Level, Build year 2040 (with noise wall)	Reduction (in dBA) with noise wall	Number of residences, commercial or industrial establishments	Number of benefited residences, commercial or industrial establishments (1)	Design goal reduction ≥ 7 dBA (2)	Length of wall (feet)	Wall Area (sq ft)	Total cost of wall $36/sq ft	Cost/ Benefited Receptor
NC1	**66.4**	60.5	5.9	1	1	0	3,301	66,020	$2,376,720	$66,020
NC2	**67.2**	60.6	6.6	1	1	0				
NC3	**68.3**	60.3	8.0	1	1	1				
NC4	**69.3**	59.7	9.6	1	1	1				
NC5	**73.3**	60.2	13.1	1	1	1				
NC6	**70.2**	59.4	10.8	1	1	1				
NC7	**66.6**	58.6	8.0	1	1	1				
NC8	64.5	57.8	6.7	1	1	0				
NC9	63.0	57.2	5.8	1	1	0				
NC10	61.9	56.7	5.2	1	1	0				
NC11	63.0	58.1	4.9	1	0	0				
NC12	63.3	58.5	4.8	1	0	0				
NC13	63.8	58.3	5.5	1	1	0				
NC14	62.0	57.7	4.3	1	0	0				
NC15	60.6	56.9	3.7	1	0	0				
ND1	**75.5**	61.6	13.9	1	1	1				
ND2	70.4	61.4	9.0	1	1	1				
ND3	66.9	60.3	6.6	1	1	0				

Receptor ID	L_{eq} Noise Level, Build year 2040 (no noise wall)	L_{eq} Noise Level, Build year 2040 (with noise wall)	Reduction (in dBA) with noise wall	Number of residences, commercial or industrial establishments	Number of benefited residences, commercial or industrial establishments (1)	Design goal reduction ≥ 7 dBA (2)	Length of wall (feet)	Wall Area (sq ft)	Total cost of wall $36/sq ft	Cost/ Benefited Receptor
ND4	64.6	59.8	4.8	1	0	0				
ND5	**76.0**	63.4	12.6	1	1	1				
PARKB1	**73.3**	65.0	8.3	1	1	1				
PARKB2	**73.1**	63.9	9.2	1	1	1				
PARKB3	**72.7**	63.0	9.7	1	1	1				
PARKB4	**72.1**	62.0	10.1	1	1	1				
PARKB5	**71.1**	60.8	10.3	1	1	1				
PARKB6	**69.8**	59.8	10.0	1	1	1				
PARKC1	**69.0**	58.9	10.1	1	1	1				
PARKC2	**68.2**	58.7	9.5	1	1	1				
PARKC3	**67.3**	58.5	8.8	1	1	1				
PARKC4	**67.7**	58.6	9.1	1	1	1				
PARKC5	**68.1**	58.6	9.5	1	1	1				
PARKC6	**68.4**	58.7	9.7	1	1	1				
PARKC7	**69.0**	58.9	10.1	1	1	1				
PARKC8	**69.5**	59.2	10.3	1	1	1				
PARKC9	**70.1**	59.5	10.6	1	1	1				
PARKC10	**70.5**	59.8	10.7	1	1	1				
PARKC11	**70.4**	59.9	10.5	1	1	1				

Receptor ID	L_{eq} Noise Level, Build year 2040 (no noise wall)	L_{eq} Noise Level, Build year 2040 (with noise wall)	Reduction (in dBA) with noise wall	Number of residences, commercial or industrial establishments	Number of benefited residences, commercial or industrial establishments (1)	Design goal reduction ≥ 7 dBA (2)	Length of wall (feet)	Wall Area (sq ft)	Total cost of wall $36/sq ft	Cost/ Benefited Receptor
PARKC12	**66.4**	58.1	8.3	1	1	1				
PARKC13	**68.4**	59.3	9.1	1	1	1				
PARKC14	64.5	58.0	6.5	1	1	0				
PARKC15	62.8	57.0	5.8	1	1	0				

Bold numbers approach or exceed Federal noise abatement criteria.

(1) Number of benefited residences, commercial establishments, or industrial establishments with a minimum 5 dBA reduction.

(2) Noise barrier must meet MnDOT's noise reduction design goal of at least 7 dBA at a minimum of one benefited receptor behind each noise barrier.